4012PIM/4012PIH

User's Manual

Autonics

---------- Note ----------

1) No part of this manual may be reproduced or distributed in any form or by any means.
2) The details of this manual are subject to change without notice.
3) Please notify us of any questions, mistakes or errors in this manual.
4) Please previously understand that Autonics will not be held responsible for any damage to the user that may result from accidents or any other reasons during operation of the user according to this document, notwithstanding the conditions of the preceding paragraph.
5) Please note that Autonics assumes no responsibility for damage caused by misuse, careless handling not specified In this manual, repairs and modification not made by Autonics's maintenance or, service technicians or those designated by Autonics,
6) For troubles caused by use of none qualified or none-brand-name optional parts or consumable items, Please take note that Autonics assumes no responsibility for those troubles even when you have been given to them within the warranty period. In the cases, services such as repairs are offered at cost to customers. Be sure to use the genuine thermal-transfer ribbon, otherwise , troubles might be caused by gypsy parts.

Safety Precautions

- **Before handling or maintaining the equipment, "Safety Precautions" should be read and understood for safe handling.**
- **Observe the important precautions concerning safety listed below.**
- **The following symbols and meanings are used in this manual;**

Warning	This symbol indicates that misuse or mishandling could result in severe injury or death.
Caution	This symbol indicates that misuse or mishandling could result in personal injury or *property damages.

***Property damages indicate extensive damage in connection with houses, household goods, livestock, or pets.**

Meanings of Graphical Symbols:

	△ **indicates a hazard (including danger, warning). Specific warning information will be given in the symbol or beside it in writing or picture.** **The symbol on the left indicates a warning for an electronic shock.**
	⃠ **indicates an act not allowed (prohibited items). Specific information about the pronibition will be given in the symbol or beside it in writing or picture. The symbol on the left indicates "prohibition of disassembling".**
	● **Indicates an action you should follow (compulsory item).** **Specific information about the compulsory item will be given in the symbol or beside it in writing or picture. The symbol on the left indicates "Disconnect a plug from a socket".**

Warning

If an unpleasant smell, unusual noise, smoking , or unusual heat evolution occurs, do not leave the condition as it is , otherwise, which will become a cause of an electrical shock or a fire. Turn the power switch off and disconnect the a plug from a socket immediately. Please contact Autonics or sales office for assistance .
To disconnect the plug for a rainy day, do not place things around a socket..
Do not fix the product yourself for your own safety.

Do not disassemble, modify , or repair the product. (except in cases where the manual instructs.) Otherwise, a fire, electric shock, injury may occur.

Do not use voltage other than voltage (AC) specified on the rating plate .
If you apply a voltage not specified, a fire or electric shock may occur.

If liquid such as oil or water, foreign object such as a clip, fragments of broken glass or metal are dropped into this printer, do not leave the condition as it is.
A fire or electric shock may occur. Turn the power switch off and disconnect the plug from the socket immediately. And please contact Autonics or your authorized distributor for assistance. You will get some useful advice on that.

Do not use a damaged power cord, a fire or electric shock may occur.
Observe the following the items when handling the power cord;
* Do not place things on the power cord.
* Do not bend, twist, or yank the power cord
* Do not work upon the power cord.
* Do not keep the power cord near hot objects such as a heater.
If the power cord is damaged, contact us or your authorized distributor for assistance .

Do not have a star-burst connection using a multiple plug box. or connect your printer an auxiliary power output on the back of your computer. A fire resulting from overheating or an electric shock may occur. Supply power through power receptacle directly.

Do not use a power cord other than the one supplied with the product.
A fire or electric shock might occur.
If the power cord is damaged, contact us or your authorized distributor for assistance.

Before inserting or extracting the power plug, always turn off the power supply.
Otherwise, a fire may occur, or the power plug may become deformed.

Warning

A care should be taken to handle a power plug.
A fire may occur by mishandling of a power plug such as overheating due to a poor electrical contact to a power receptacle.
Observe the following when handling the power plug;

- Do not insert the power plug with adherents such as dust or dust into a power receptacle.
- Plug the power cord into the wall outlet securely.
- Do not use a wobbly power receptacle.

The insertion and extraction of the power plug.

- Always remove the power cord from a receptacle outlet by pulling on the plug, or plug the cord into the outlet by inserting on the plug.
- If the printer is not in use for a long time, always unplug the power cord from the power receptacle . A fire might occur due to electrically conductive dust.
- Insert or extract the power plug with dry hands. A electric shock may occur with moistened hands.

Do not give the product strong shocks, dropping it or bumping it against something like a desk.
If the product is used as in this case, a fire or a electric shock may occur.
A strong shock or a dropping may cause a failure of the printer made of precision parts.

Before connecting a interface cable, or the other options, always turn off the power switch. A electric shock may occur .

CAUTION

During printing operation, do not turn off the power.
Otherwise. a breakdown may occur or malfunction may be caused in the following operation.

If power the printer off and on again, do not power on again immediately after powering off.
A breakdown may occur. To avoid a possible malfunction caused by such an operation,
in such a case, you should turn the power on again after waiting for about 10 minutes.

Do not place the printer on unstable locations such as unsteady or tilted surfaces.
Otherwise it may drop or fall, resulting in jury to persons.

Keep out of reach of small children.
Otherwise it may drop or fall, resulting in jury to them.

Do not climb onto the printer or do not place weighty objects on the product.
Otherwise, it may tip over or break down.

Before moving the printer, first turn off the power switch, unplug the power cord from the power receptacle, and be sure that all wires have been already pulled out from the printer .

Install the printer in the well-ventilated place.
Otherwise, a fire may occur by blocking heat from escaping.
Do not install the product at the following locations;

- at unventilated places such as in a closet or in a bookcase .
- on a blanket or on a bed.
- or , do not put a coverlet over on the printer.

While the printer is in operation, the case of the printer rises in temperature, because heat due to the power supply and the motor unit.. For installation beside wall, create clearance of more than 5 cm between the case of the printer and wall.

Do not place the product in dusty or humid area.
A fire or electric shock might occur.

Do not place the printer in places exposed to or prone to vibration.
Otherwise it may drop, resulting in jury to persons beside the product.
A breakdown or malfunction may be caused because of vibration.

During a printing operation or at the time of a cold start,
Keep hands away from the moving part inside the printer or the label expelling part to prevent injury, because your fingers may be entangled with the platen rollers or the peel-off roller in the printer.
Remove the labels from the printer after the completion of operations .

Do not use print media other than our genuine parts or those qualified by Autonics.
A breakdown might occur.
If the print media other than our genuine parts are used, check with Autonics whether they can be useed with your printer or not.

Look out for potential injury.
If the back side or inner parts of the printer are unconsciously touched, injury could occur.

Table of Contents

	Page
Safety Precautions	1
Table of Contents	5
Introduction	6
1. Major features	6
2. Installation location	7
2.1 A favorable environment to set up the product is;	7
2.2 Unfavorable place to set up the product is ;	7
2-3 Working voltage for this printer	7
2.4 Installation requirements	7
3. Operating instructions	8
3.1 Part name	8
3-2 Opening / Closing the print mechanism	10
3.3 Loading a roll of label paper and a roll of thermal-transfer ribbon	11
3.4 Operator panel	13
3.5 Operation procedure	14
3.6 Print check (Test printing)	17
4. Printer operation directly given by panel switch	18
4.1 Self-test printing	1 8
4.2 Reset operation	18
4.3 Executing an element test	18
4.4 External characters back-up	19
4.5 Reprinting	19
4.6 Length measurement	19
4.7 Label alignment	19
5. Switches to configure the printer operating condition	20
5.1 Special functions of operation of switches	21
5.2 Print adjustment mode	22
5.3 HP level Learning	25
5.4 Operational setting mode	28
5.5 Configuration	35
5.6 Table of panel setting function	39
5.7 Panel Setting Guide (Example)	40
6. Error occurrence and recovery	43
6.1 Mechanical related errors	44
6.2 Communication related error	46
6.3 Analysis errors	47
6.4 Other errors	47
7 Specifications	49
7.1 General specifications	49
7.2 Features	49
7.3 Fonts and Barcodes	50
7.4 Character code table	50
7.5 Print media	51
8 Maintenance	53
8.1 Cleaning and a routine check	53
8.2 Handling or replacing printhead	54
8.3 Mechanically consumable service components available with additional cost	54

Introduction

Thank you for purchasing Barcode Printer models, 4000PIM/PIH series..
The printer allows you to print an OCR character, barcode, characters such as alphanumeric and Kanji, and graphic characters on the thermal label in high quality.
Please read the manual thoroughly to make full use of the capabilities of the printer and to handle your your printer properly before using it..
Always Keep this manual and its related documents on hand to solve your questions.
See the reference manual about printer programming information to control the operation of your 4012.
Also, we can provide the general-purpose package software that you can make label form freely and easily.

1) Package list

4000PIM/PIH series	Barcode printer	1
Power cord		1
Operation manual		1
Reference manual		1

Note) The package does not contain a cable to connect to a host computer.

1. Major features

In addition to the basic printing capabilities such as alphanumeric characters, Katakana and Kanji characters for Japanese, graphic characters, OCR and the like, the 4000PIM/PIHseries have their own characteristics as shown below;

(1) Since the printer measures a label length automatically (in the feed direction.) to control a label position, Different kinds of labels in length can be freely interchanged without much expense in time.
(If a label length is too short, we would rather recommend you to manually set a label length with the panel switch, because a dimensional error of length measurement for a short label is cumulative.)
(2) To cut running cost, when the auto-cutter is used, the gap between labels with about 4 mm is long enough (the other operational modes require 3mm typically, 2 mm in minimum.), and the printer has a back feed capability to . decrease an unprintable area in the peel-off, tear-off, or cutter mode.
(3) Continuous printing with the same format allows improvement in processing speed because you can enjoy continuous label printing.
(4) An adjustable print density allows quality printing.
(5) The capability to make a fine adjustment of the print starting position allows a fine adjustment of the print position.
(6) Easy return from errors (paper-empty, paper jam, no ribbon, Printhead (mechanism)is open etc.) that occur during printing and data custody immediately before an errors occurs allow a continuos regular operation.

2. Installation location

2-1 A favorable environment to set up the printer is;

- A horizontal and stable place
- A well-ventilated place
- A following temperature and humid, 10 °C to 35°C, 20% to 80%

2-2 Unfavorable place to set up the printer is ;

Since this printer is made of precision mechanism and precision electrical components, always avoid to set up the instrument in the following environment., otherwise, a malfunction or failure may occur.

- A place exposed to direct sunlight.
- A dusty or moted place
- A place exposed to extreme temperature
- A place exposed to extreme humidity
- A place near flame
- A place easy to get wet by water
- A place near volatile liquids
- A place near an air conditioner
- A place near a humidifier
- A place sensitive to vibration

2-3 Working voltage for this printer

1) Take power from AC100V to AC260 line.
   Power supply voltage should be used from 100VAC to 260VAC, in 50㎐ or 60Hz.
   A higher or lower voltage will cause your cutter to a trouble or a malfunction.
   The use of a power supply voltage without specification will cause the risk of an electrical shock or a fire.
   Using an outlet of a 3-pin AC plug (a grounded AC plug) should be recommended for safety reasons.
   When an outlet of a 3-pin AC plug is used, be sure to establish a ground for the printer as protective grounding. Ungrounded your printer might cause the risk of electrical shock.
2) Separate the power line of this printer from the equipment with the origin of the noise such as a large-size motor.

2-4 Installation requirements

1) Operating temperature is the range of 5 to 40℃.
   In addition, keep conditions of up to 85%. R.H to prevent condensation from forming.
2) Place your printer in the horizontal position and in a vibration-free environment wherever possible.
3) Facilitate the ventilation of air above and around your printer. Leave about five cm of space around your printer for ventilation.
4) Never do a polish task using a grinder or a sand paper beside your printer. The printer hates dusts, especially, such as high hardness dusts, sands, metallic dust particles, because they may cause the failure of printhead. Pay careful enough attention to avoid the above dusts. Also, never use your printer in a humid atmosphere or a dust atmosphere including an oil/ iron content dust.
5) Do not install your printer near TV or radio. Very weak radio wave energy from the printer may give noise to them.
6) When the printer is installed in an atmosphere where static electricity is likely to occur, use a static protection carpet to prevent static-buildup.

3. Operating instructions

3.1 Part name

3.1.1 4012PIM

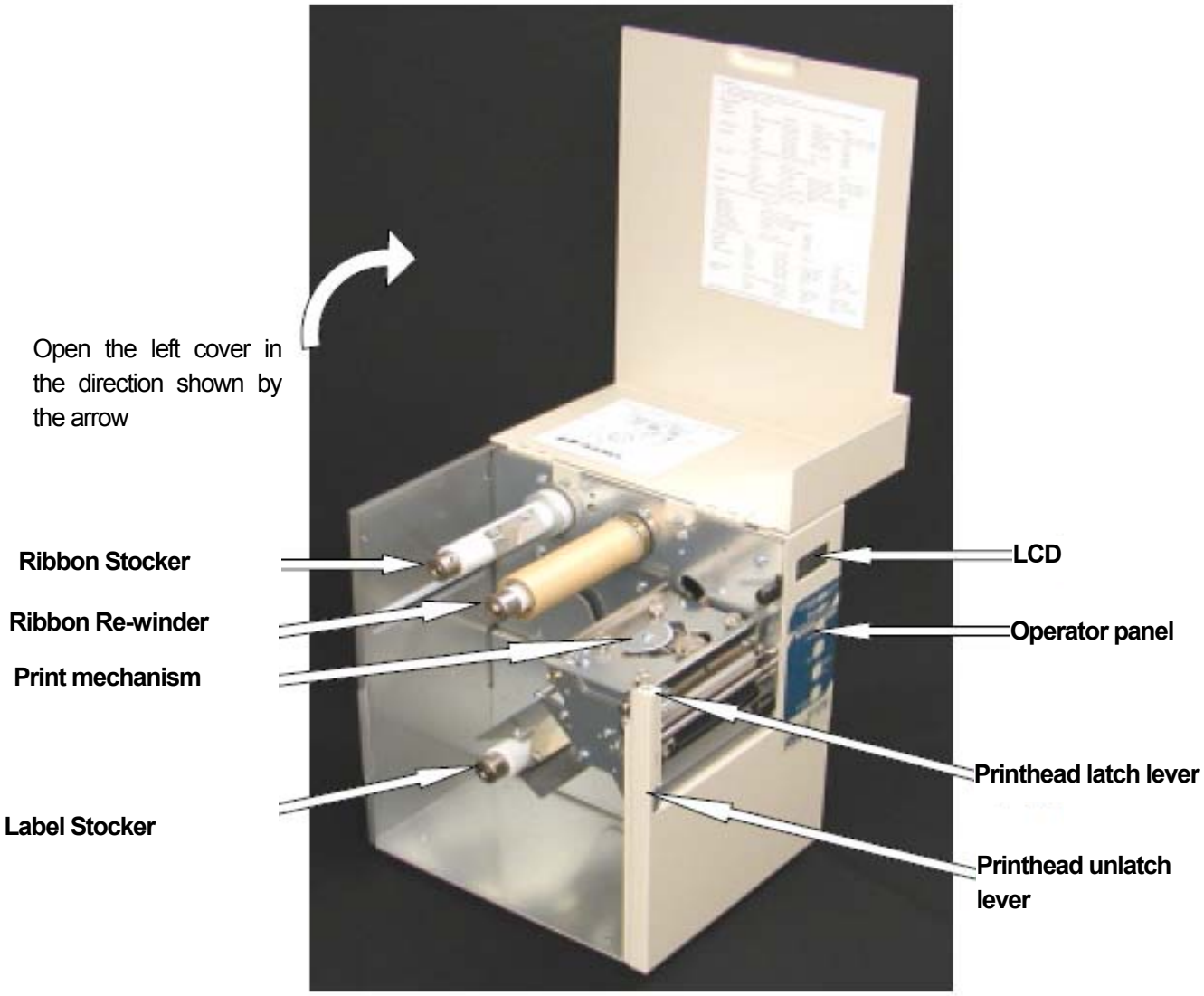

Fig.3-1a From a view from the left front (with the left cover open)

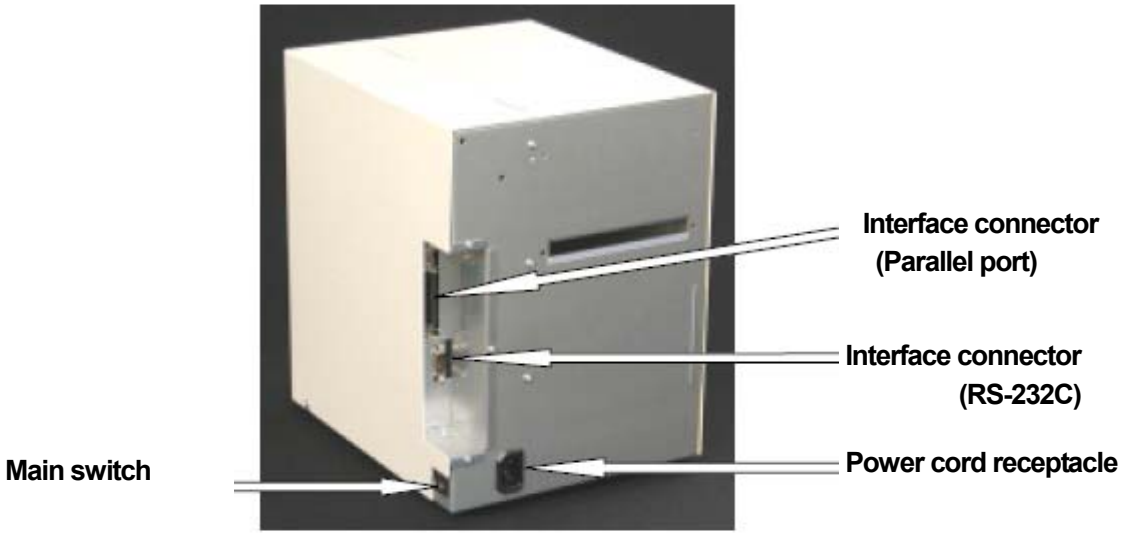

Fig.3.1b A view from right back

3.1.2 4012PIH

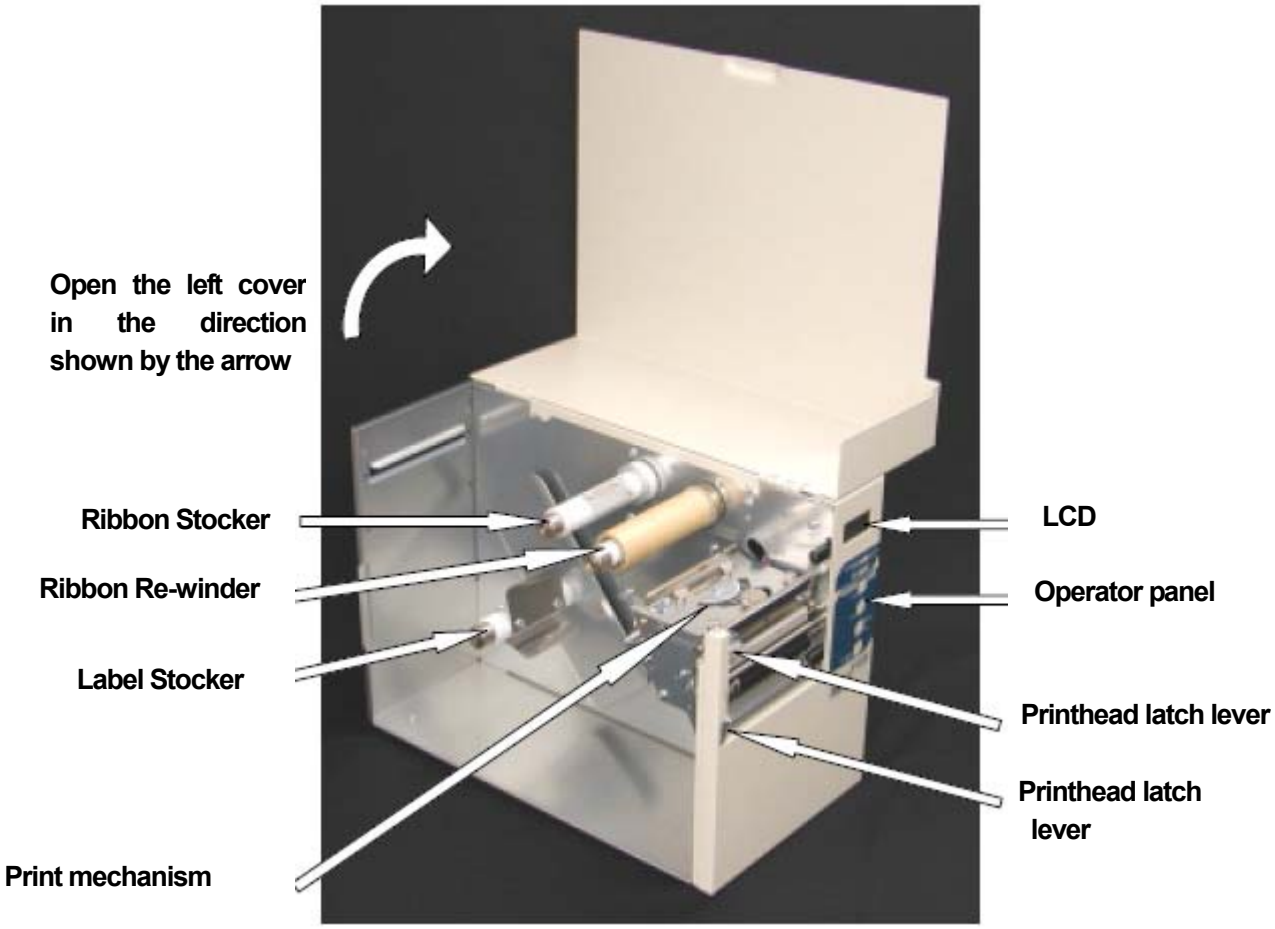

Fig.3-1c From a view from the left front (with the left cover open)

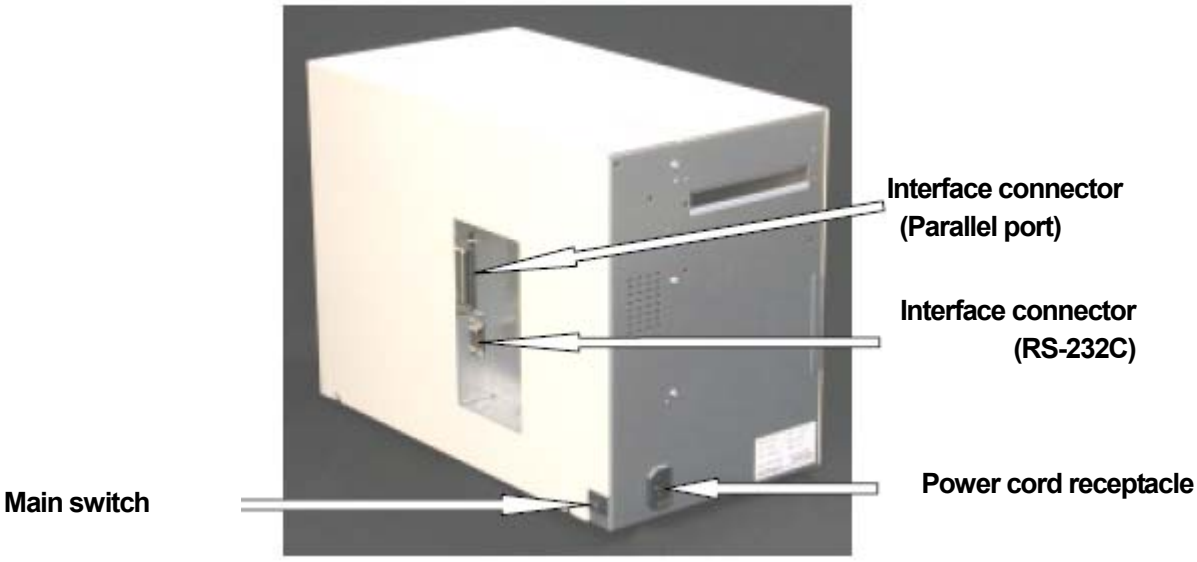

Fig.3.1d A view from right back

3-2 Opening / Closing the print mechanism

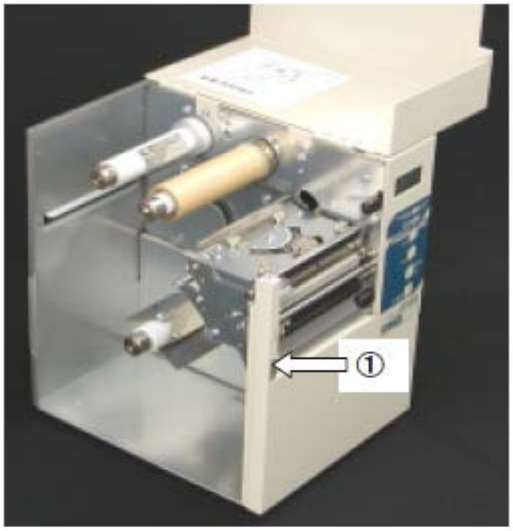

Fig.3-2a When the print mechanism is closed.

3.2.1 Open the printing part(print mechanism).

With the print mechanism closed as shown the picture on the left, first push the printhead lock release button in the No.1 arrow direction to release the lock. Pull the printhead lock lever up to open the mechanism as shown the No.2 arrow in Fig.3-2b below. It can be opened at angles up to about 90 degree.(Fig.3.2c)

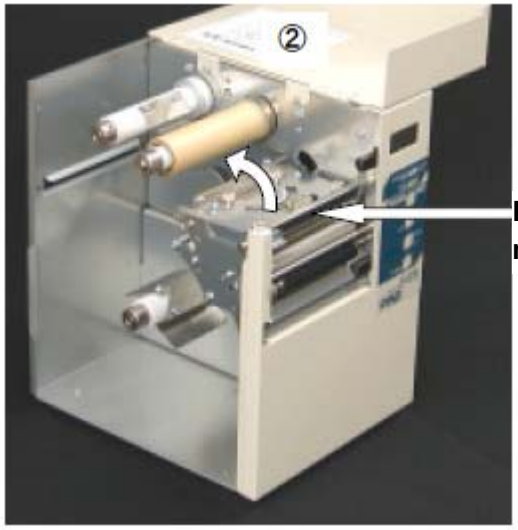

Printhead mechanism

Fig.3-2b When the printhead mechanism is open with the lock released.

Fig.3.2c When the print mechanisms is open with maximum angle.

3.2.2 Close the print mechanism.

Push the printhead lever in the No.3 arrow direction in Fig.3-2c to close the print mechanism, until you hear a click (or feel a click.).

(Fig.3-2d the print mechanism is in a closed state.)

Fig.3-2d the print mechanism is in a closed state.

3.3 Loading a roll of label paper and a roll of thermal-transfer ribbon

3.3.1 Loading label roll paper

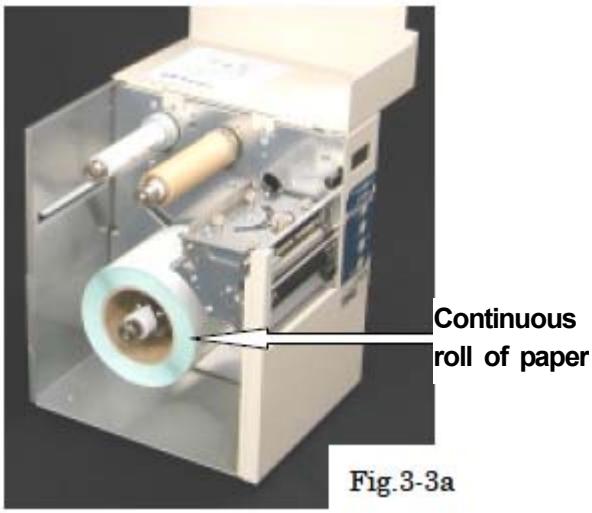

Fig.3-3a

1) Load a roll of label paper into the label supply roller until it hits the stop plate of the label supply roller(see 3-3a).

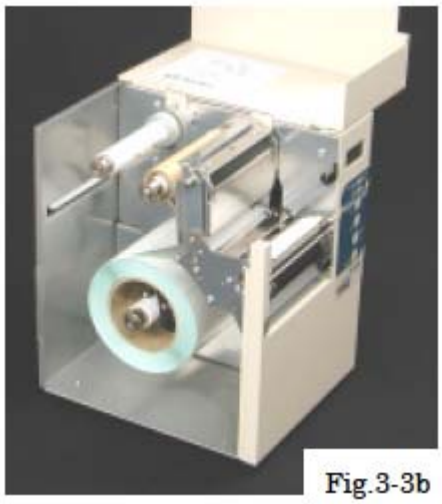
Fig.3-3b

2) Open the print mechanism.（ See "3-2 Opening / closing the print mechanism. "）

3) Pull out the roll of label paper from the label supply roller, then run the roll paper through between the printhead and the platen roller (over the platen roller) by way of Home position sensor. Pull it out in length long enough.

*The home position sensor is located under the printhead to the back.

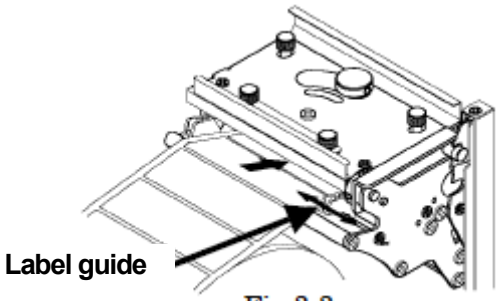

Fig.3-3c

4) Align the label guide with the label width.(with the gap of less than 1 mm between label and guide.)
An excessively label-to-guide wide alignment or too much pressure applied on the label may result in skew feeding.


Fig.3-3d

5) Close the print mechanism（See "3-2 Opening / closing the print mechanism. "）

* Now, loading a roll of label paper is complete.
For use of a direct thermal paper, skip next page. For use of thermal-transfer ribbon, see next page
to load thermal-transfer ribbon to the ribbon supply roller.

3.3.2 Loading a thermal-transfer ribbon

Fig.3-3e

1) Load a roll of thermal-transfer ribbon (ribbon) into Ribbon Stocker until it hits the stop plate.
2) Open the print mechanism.（ See "3-2 Opening / closing the print mechanism. "）

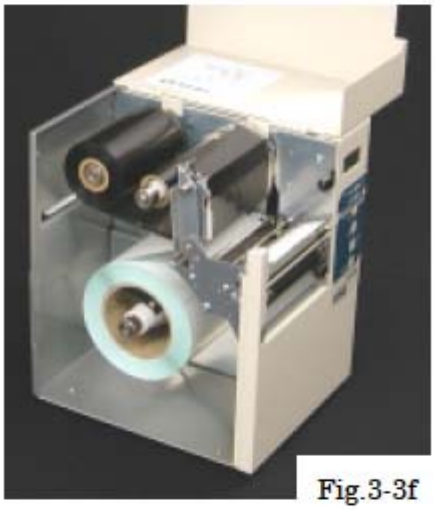

Fig.3-3f

3) Pull out the ribbon from the label supply roller.

4) Secure the tip of the ribbon with tape on the paper core of ribbon take-up roller.

5) Give the take-up roller several turns to wrap the ribbon around the ribbon take-up roller.

Fig.3-3g

6) Close the print mechanism（ See "3-2 Opening / closing the print mechanism. "）

* Now, loading a roll of thermal-transfer ribbon is complete.

3.4 Operator panel

Fig.3-4a

Enlarged view

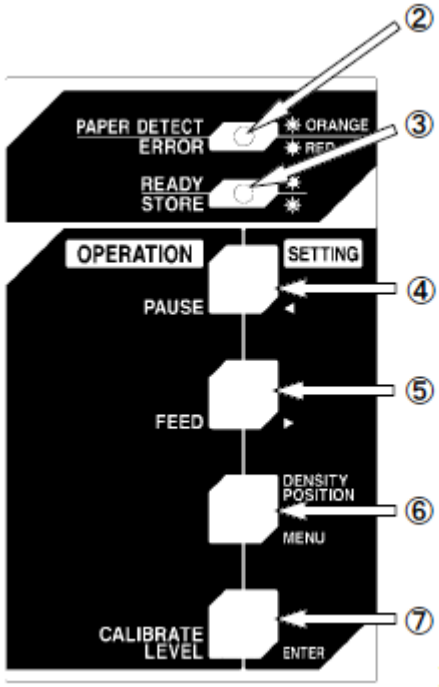

Fig.3-4b

1). LCD

LCD with 8 columns by two rows displays printer working status, error descriptions, parameter settings, and menus.
For more information, see chapter 4 and 6.

2). PAPER DETECT/ ERROR (RED LED/Orange LED)

When some error occurs in the printer, the red LED lights and the internal beep sounds.
When detecting backing paper without labels during a labeling operation, the orange LED lights.

3). READY/ STORE (Green LED)

The LED lights while the printer is in a Ready state.
During a writing operation to memory with data (External characters, farm ware),.the LED blinks.
While the LED is blinking, never turn the power off.
If the power is turned off in process of writing external characters to internal memory or updating a firmware, your printer will fail to operate as intended.

4). PAUSE / ◄ switch (is described as PAUSE／◄ 、PAUSE 、◄ in the document.)

The switch alternates between the ready state and the pause state(or Standby) in the printer, is used for a transfer switch for state, setting value. READY/PAUSE appears on LCD.
◄ indicator acts as a cursor to select functions using the panel.

5). FEED / ► switch (is described as FEED／► 、FEED 、► in the document.)

The switch is used to feed print media in the pause status.)
► indicator acts as a cursor to select functions using the panel.
In the ready status, this switch is also used to print the last page once again.
If you turn the power on while holding down the switch, the printer perform length measurement .

6). DENSITY / POSITION / MENU switch (is described as DENSITY／POSITION／MENU 、MENU .)

Using this switch / other switch combination can change a function from one to another.

7). CALIBRATE LEVEL/ ENTER switch (is described as CALIBRATE LEVEL／ENTER 、ENTER .)

In the pause state , The switch can be used to confirm each function newly selected, using ◄ ► switch. Pressing and holding the switch for one or more minutes will start “Calibrate Level”.
In a ready state, external character data written in the internal memory are backed up to internal ROMs.

3-5. Operation procedure

The part framed in by [ ] in this manual describes a switch on the operator panel,

The part bracketed by ' ' , single quotation mark, shows an description on LCD, such as ' **First line / Second line** ' .

□□□ represented as the item on LCD shows the values of a variable.

3.5.1 For work with a roll of label paper

When you first handle a roll of label paper after buying the printer, or use another roll of label paper (changeover in labels) , the following operation procedure is required.

1) Make sure the connection of the power cord is tight
2) Make sure the interface cable is connected to your host computer,
3) Load a roll of paper (with labels) and a thermal-transfer ribbon into the printer.
4) Turn on the power
5) Check 'READY' on LCD.
6) Perform **Home Position (HP) level learning** and **length measurement** for label.

   Press [PAUSE／◀] switch to enter into the pause state. ' PAUSE' appears on LCD.

   Pressing and holding [CALIBRATE LEVEL／ENTER] switch for one second or more results in emitting a beeping sound and "Calibra. Len □□0 " appears on LCD. □□0 shows the previous setting value. Change a label length according to the label pitch length to be used.

   Make an adjustment of the length by 10 mm increments/decrements with [FEED／▶] or [PAUSE／◀] switch. The setting value requires about 10 mm longer than the actual label pitch length.

   Press [CALIBRATE LEVEL／ENTER] switch again to perform HP level learning for label.

   As a result, ' Calibra. Busy!! ' following ' Measure Busy!!' appears on LCD with 3 to 5 labels feed.

   The printer gets ready for use with ' READY' on LCD.

) If an error arises, go to " 6. **Error occurrence and recovery".

7) Printing starts, when the printer receives a print instruction from a host computer.
   (Communication settings between this printer and the host computer is required.)

For test printing, go to "3-6 Print check (Test printing) "

From next time, the printer will get ready for printing just after power-on, with ' Ready ' on LCD. if you use the same label. (When you do not change into another label.)

3.5.2 For work with a continuous roll of paper.

When you first use a continuous roll of paper after buying your printer, or use a continuous roll of paper after using a roll of label paper, the following operation procedure become required.

1) Make sure the connection of the power cord are tight
2) Make sure the interface cable is connected to your host computer,
3) Load a thermal-transfer ribbon in the printer. Check that the printer mechanism does not have a continuous roll of paper . (if a continuous paper roll of paper is loaded in the print mechanism , remove it.)
4) Turn on the power.
5) Shift the label type on LCD from “Die cut” to “Contin.” with the operator panel.
   Push down PAUSE /◀ switch to get ‘Pause ‘.
   While pressing DENSITY／POSITION／MENU switch, press FEED/▶ switch. ’ Print SPD /□□□. □mm /s’ appears on LCD. Press CALIBRATE LEVEL／ENTER switch three times to get ‘ Media’ on LCD.
   Push down FEED / ▶ switch to get ‘ Media / Contin. ’ on LCD. Confirm your choice by pressing CALIBRATE LEVEL／ENTER Switch. ‘ LBLpitch /□□□. □mm’ appears. While pushing down DENSITY／POSITION／MENU switch, press PAUSE /◀ switch to get ’PAUSE’ .
6) Perform HP LEVEL LEARNING.
   Pressing and holding CALIBRATE LEVEL／ENTER switch for about one second results in emitting a beeping sound and ‘ Calibra. ‘ appears on LCD.
   Press CALIBRATE LEVEL／ENTER switch again to perform HP level learning.
   ‘ Calibra. Busy !! ‘ appears on LCD, then the printer gets ready for use with ‘ READY’ on LCD.

) If an error arises, go to “ 6. **Error occurrence and recovery”.

7) Open the cover of the printer mechanism. run print media (a continuous roll of paper)through the printhead mechanism and close the print mechanism. Opening the cover of the print mechanism will result in ‘Head open ‘error with a warning beep. Press PAUSE/◀ switch to stop the warning beep.
8) Press PAUSE / ◀ switch to get ‘ PAUSE ‘ on the LCD.
9) After pushing down PAUSE / ◀ switch once again. the printer feeds the print media and gets ready for use with ‘ READY ‘ on LCD.
10) Printing starts, when the printer receives a print instruction from a host computer.
    (Communication settings between this printer and the host computer is required.)

For test printing, go to “3-6 Print check (Test printing)“

From next time, the printer will get ready for printing just after power-on, with ‘ Ready ’ on LCD, if you use the same label. (When you do not change a label to be used.)

3.5.3 How to shift from a continuous roll of paper to a roll of label paper

When you change print media from a continuous roll of paper to a roll of label paper, the following procedure become required.

1) Load a roll of label paper and a thermal-transfer ribbon in the printer.
2) Turn on the power.
3) Change media from 'Continuous' to 'Label' using the operator panel.
   Push down PAUSE /◀ switch to get 'Pause '.
   While pressing DENSITY／POSITION／MENU switch, press FEED/▶ switch. ' PrintSPD□□□. □mm / s' appears on LCD. Press CALIBRATE LEVEL／ENTER switch three times to get ' Media / contin.' on LCD. Push down FEED / ▶ switch to get ' Media / Die cut' on LCD. Confirm your choice by pressing CALIBRATE LEVEL／ENTER Switch. ' Measure / Manual ' appears on LCD.
   While pushing down DENSITY／POSITION／MENU switch, press PAUSE /◀ switch to get 'PAUSE' on LCD.
4) Perform Home Position (HP) Level learning and Length Measurement.
   Pressing and holding CALIBRATE LEVEL／ENTER switch for about one second results in emitting a beeping sound and " Calibra. / Len □□0' appears on LCD. Change a label length according to the label pitch length to be used. Make an adjustment of the length in 10 mm increments / decrements with PAUSE／ ◀ FEED/▶ switch. The setting value requires about 10 mm longer than the actual label pitch length.
   Press CALIBRATE LEVEL／ENTER switch to perform HP level Learning.
   As a result, ' Calibra. / Busy!! ' following ' Measure/ Busy!! appears on LCD with 3 to 5 labels feed.
   The printer gets ready for use with ' READY' on LCD.

) If an error arises, go to " 6. **Error occurrence and recovery".

5) Printing starts, when the printer receives a print instruction from a host computer.
   (Communication settings between this printer and host computer is required.)

   For test printing, go to "3-6 Print check (Test printing)"

   From next time, the printer will get ready for printing just after power-on, with ' Ready ' on LCD, if you use the same label. (When you do not change a label to be used.)

3.6 Print check (Test printing)

Try to print the following test pattern sample below after finishing the HP learning (HP level learning)
Turn your printer back on.

Press PAUSE / ◄ switch	PAUSE
While pushing down DENSITY/PAUSE/MENU switch, press CALIBRATE LEVEL / ENTER switch .	TEST PRT Ptrn 1 !!
For test pattern 2, if necessary, press FEED / ► switch	TEST PRT Ptrn 2 !!
Press CALIBRATE LEVEL / ENTER to start printing.	TEST PRT 1 !!

As mentioned above, your printer start printing.
Test printing is toggled between Stop and Resume by PAUSE /◄ switch.
Termination should be done by the power switch.

TEST PRINTING PATTERN 1

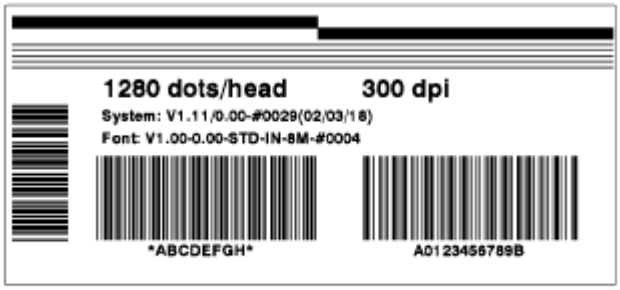

Fig.3-6a

TEST PRINTING PATTERN 2

```
01. MODEL INFORMATION
Model Type        = Standard edition
System Version    = 1.11/0.00-#0029 (02/03/18)
Font Version      = 1.00-0.00-STD-IN-8M-#0004
Model Code        =  23
Head No.          =  0
Machine No.       =  0
Power Supply No.  = 1
Max Print Speed   = 200mm/s
Min Print Speed   =  15mm/s
Memory Size       =  8MB

02. HEAD INFORMATION
Head Size         = 1280dots/head
Head Density      = 11.800dots/mm
Element Test      = NG
Maker             = KYOCERA
Groups            = 2
Strobe Dication   = CONT

03. USER MAINTENANCE
Head Resistance   = 1250 Ohm
Total Mileage     =      Dm

04. COMMUNICATION
Interface         = RS
Command           = ALL
Character Code    = SFT JIS
HP Sensor         = Transmit
Count Dication    = Repeat
Feed Speed        = +00
Plane Format      = Triple

05. ADJUST
Print Density     = +00
Print Position    = +00
Peel/Cut/TearPos  = +00
Engulf Defense    =  5.0mm

06. MOVEMENT MODE
Print Speed       = 100mm/s
Print Mode        = Standard
Print Method      = Transfer
Label Type        = Continuous
Measure Label     = Manual
Set Label Pich    = 200.0mm
Set Gap Length    =   3.0mm
Left Margin       = +00
Label Skip        =  1

07. RS232C
RS232C Baud Rate= 9600
RS232C Parity   = NONE
RS232C Stop Bit = 1
RS232C Data Bit = 8
RS232C Control  = RS/CS

08. LAN
LAN IP Address  = 001.001.001.001
LAN Sub Net MSK = 000.000.000.000
LAN Gateway     = 002.002.002.002
LAN Port Number = 00000
LAN Protocol    = FTP
```

Fig.3-6b

4. Printer operation directly given by panel switch

4.1 Self-test printing

While holding down PAUSE / ◄ switch, turn the power on to get into this mode.
There are two patterns as test printing. Confirm your choice by pressing CALIBRATE LEVEL／ENTER switch after using FEED /► or PAUSE / ◄ .switch for a choice.

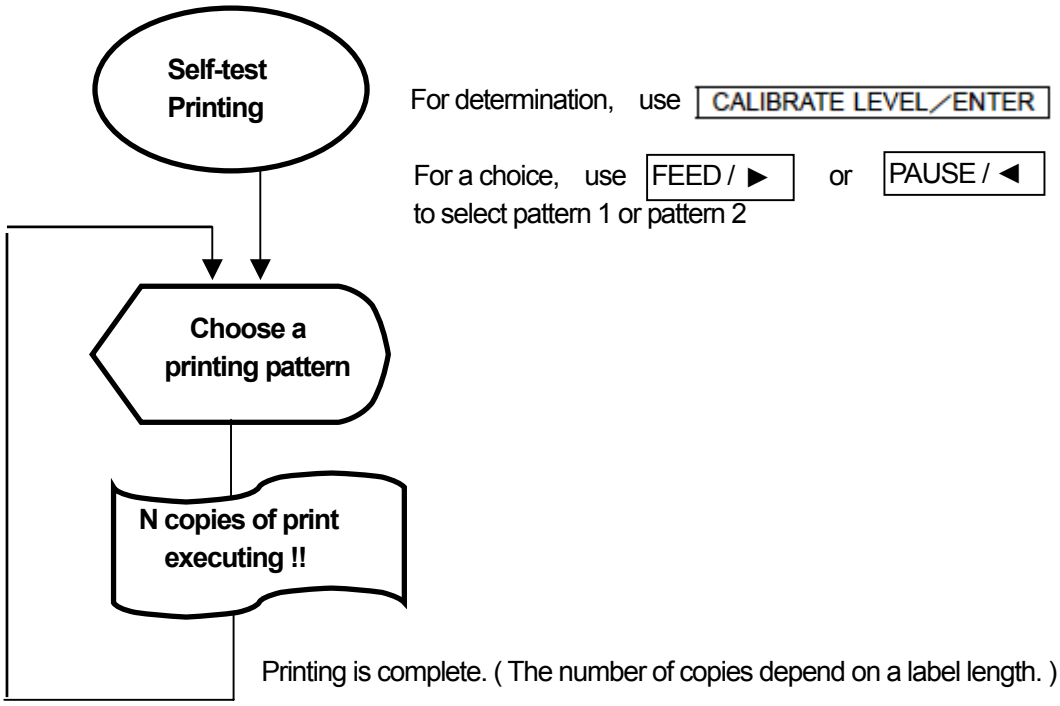

During self-test printing, the printer stops by N copies and waits for next instruction.
To exit this mode, reboot your printer or reset your printer (a warm start)

4.2 Reset operation

While pushing CALIBRATE LEVEL／ENTER down, press PAUSE / ◄ switch to start a warm start.
This restart is almost the same function as that of start-up, except length measurement for label.
Resetting during an ongoing operation, such as a length measurement, an error recovery, printing, or feeding, requires a label length measurement or its alignment. It takes a few minutes to restart your printer (the time until ‘ Ready’ appears on LCD). During the time, the printer can not receive an instruction from your host computer, do not send data to your printer.

4.3 Executing an element test

Start an element test manually.
If ‘ Elem. Ck ’ has been set to ‘ Manual’ in the configuration mode, the test is executed one time, however it does not work the model unavailable for this service.

[Operating instructions]

Place your printer in the pause state, use CALIBRATE LEVEL／ENTER and FEED / ► combination, while pushing down DENSITY/PAUSE/MENU switch. ‘ Elem. Ck / Go Can ‘ appears on LCD.
Underline ‘ Go ‘ by using FEED/ ► switch to hit CALIBRATE LEVEL / ENTER for execution.
‘ # Pause’ appears on LCD.
‘ # ‘ followed by ‘ Pause ‘ indicates that element test is in action.

4. 4 External characters back-up

After writing user defined characters into the internal memory, on the condition that there are no data for print out and ‘ $ Ready ‘ has been displayed on LCD, If CALIBRATE LEVEL / ENTER is pressed, the cataloged external characters are saved into the internal ROM.
During writing, “READY” LED blinks and ‘ Ext-Font /Resist !! ‘ appears on LCD.
During writing, it takes about 10 seconds (12 to 16 seconds), After writing, when restarting your printer, you can callback the power external characters stored in ROM.
This function only works on the condition that there are no data for print out and ‘ $ Ready ‘ is displayed on LCD,.

4.5 Reprinting

After printing is complete, under the ‘ Ready ’ state, Pressing FEED/ ► switch allows an issue of the last printed label.
It is available to reprint the last label on the condition that there is no data to print it out .

4.6 Length measurement

For the use of a roll of label paper, length measurement is performed with preliminary two or more labels feeding.
In this case, the printer makes a length measurement only, does not do HP level learning.

[Operating instructions]

While pushing down FEED / ► switch, turn on the power.
After making a length measurement and a label alignment, the printer gets ready and ‘ Ready ‘ appears on LCD.
As ‘ LV Error ’ occurs, perform HP level learning.

4.7 Label alignment

For a roll of label paper, align a label with a print staring position, If you move a label in the power-off state(such as the opening of the printhead) , At power-on again, a label alignment is required.

[Operating instructions]

While pushing down the DENSITY / POSITION / MENU and FEED / ► switch combination, turn on the power.
After making a label alignment, the printer gets ready and ‘ Ready ‘ appears on LCD.

5 Switches to configure the printer operating condition

A list of configuration of each operating part

Configuration	Setting function		Setting range , Setting Items	Factory defaults
Print adjustment	Print density		-15 to +15	00
	Print position		-30 to +30	0
	Tear-off, Peel-off, or Cutter position		-30 to +30	0
	Entanglement prevention position		00.0 to 99.9mm	05.0mm
Operational Settings	Print speed	4012PIM	15,20,30,40,60,80,100,120,150mm/s	100m/s
		4012PIH	15,20,30,40,60,80,100,120,150,200mm/s	
	Operation method		Feed, Feed and Tear-off, Tear-off, Peel-off, Cutter	Cutter
	Printing method		Direct thermal, Thermal-transfer	Transfer
	Print media		a roll of label paper, a continuous roll of paper	Label
	Length measurement mode		Manual, PGM, each cycle	Manual
	Label pitch		003.0 to 999.9 mm	053.0mm
	Gap length		000.0 to 999.9 mm	003.0mm
	Left margin		0000 to Total number of heating element -1	0000
	Label skip		00 to 10 sheets	01
RS communication configuration	RS Speed		4800,9600,19.2k,38.4k,57.6k,115.2k bps	9600
	RS parity		None, Even, Odd	None
	RS stop		1,2	1
	RS data length		8,7	8
	RS control		RS/CS, ER/DR, XON/OFF	RS/CS
Configuration	Interface		RS, Centronics, LAN,USB	RS
	Kanji (Japanese character)		Shift JIS, JIS	Shift JIS
	HP sensor		Transparent mode, reflection mode	Transparent
	Print paper count display		Total, Repeat, meter, none	Total
	Feed speed		+00 to +09	+00
	Drawing memory		Single, Double, Triple,	Triple
	External character save		Manual , Automatic	Manual
	Element test		Manual, Automatic	Automatic
	Element area		0001 to Total number of Heating element	1280
HP level learning (HP level learning + Length measurement + Alignment)	Sensing length		010 to 990 (mm)	010

5.1 Special functions of operation of switches

The section provides information on special functions prepared as operational utility, before describing the contents of configuration settings.

5.1.1 Setting operation history records

At the setting mode, the first menu you see is the item that you set last. For example, after setting “Print SPD “ at the print adjustment mode, exit from the mode once, then you enter into the mode again, “Print SPD” you saw last appears in the menu and you can start with the menu. However, after power-off or reset, the history is erased.

5.1.2 Function for digit selection

This function is available to set a value of digit number by one digit for many digits.
The function works in three or more digits setting by using DENSITY / POSITION / MENU switch for the digit selection.
A digit selection is moved into only one direction from low below, and minimum digit follows maximum one.

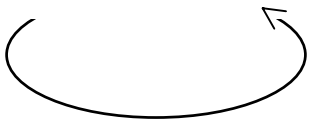

< Example >

To set a label pitch length to ‘083. 0’

1. ‘0.53. 0’ appears at first. The cursor is placed under the minimum digit.
2. Push down DENSITY / POSITION / MENU switch two times. The cursor is moved forward in the second digit.
3. Pushing down FEED / ► switch three times increments . five by three.
4. The setting is complete by pushing down CALBRATE LEVEL / ENTER switch.

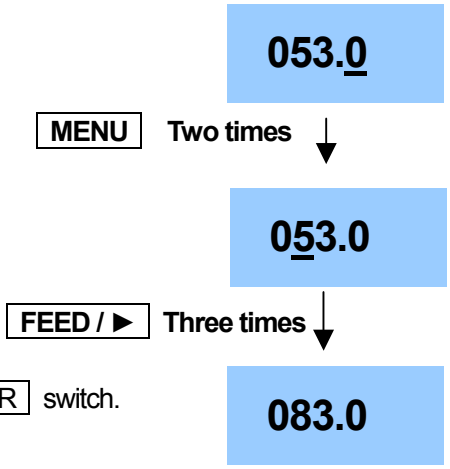

Fast forward or reverse for place value

Changing value in each digit can be usually done by pushing down PAUSE / ◄ or FEED / ► switch one time at a time. However, Pressing and holding the above switch for about 1 second will start automatic increment or decrement by 0.1 seconds. If you keep in the as-is state for three seconds or so, the behavior is accelerated.
If you properly use the previous “digit selection function” and this “speed-up function” , you can set large value easily.

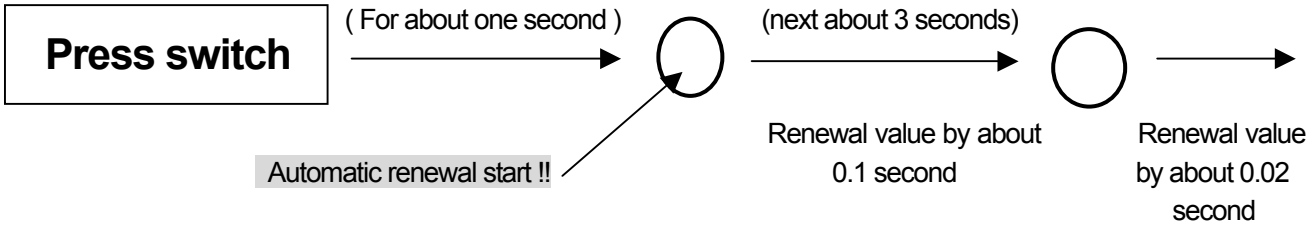

5.2 Print adjustment mode

While pressing and holding DENSITY / POSITION / MENU switch, press PAUSE / ◄ to enter into this mode.
While pushing down DENSITY / POSITION / MENU switch, press PAUSE / ◄ switch to return to the Pause state..

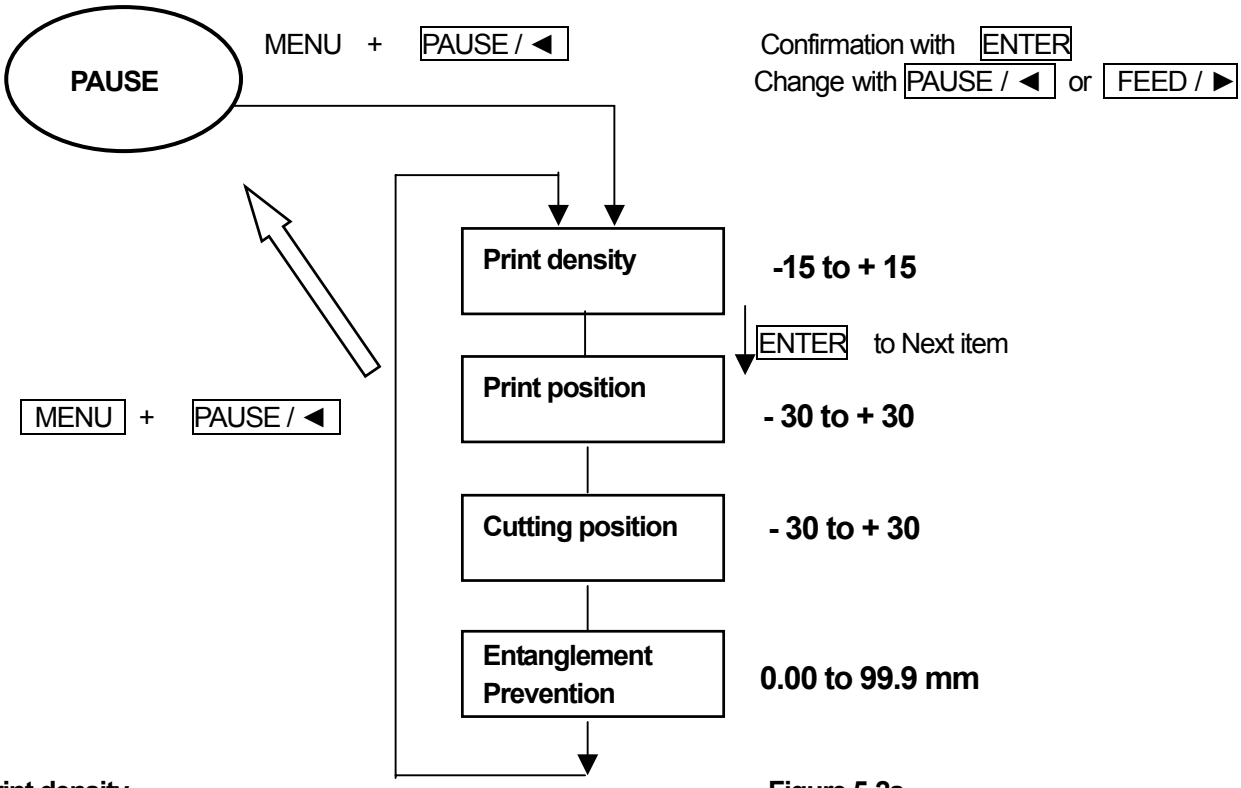

Figure.5-2a

5.2.1 Print density

Message : ‘ Density / □ □ □ ‘
Function : Print density fine-tuned in the range of –15 to +15
Item : -15 to +15

- Increasing numeric data becomes dark.
- The print density can be adjusted within the range of print speed affecting the item. Choosing values in the neighborhood of + 15 might remains unchanged in print density. In such a case, adjust print density again with +/- one shift in print speed .
- The density change per one step depends on print speed.
- After the setting-up, the value becomes effective in next- time printing.
- The initial (default) value is optimized (,which is subject to label or ink ribbon)

5.2.2 Print position

Message : ‘ Print Pos / □ □ □ ‘
Function : Print position is adjustable in the range of +/- 3 mm by 0.1 mm increments/decrements.
Item -30 to + 30

- Increasing numeric data(+ direction) moves a label printing position backward from the top edge of the label.
- If a setting value is less than -20 (about 2mm), the unprintable area may occur because the print starting position goes out of the top edge of the label.

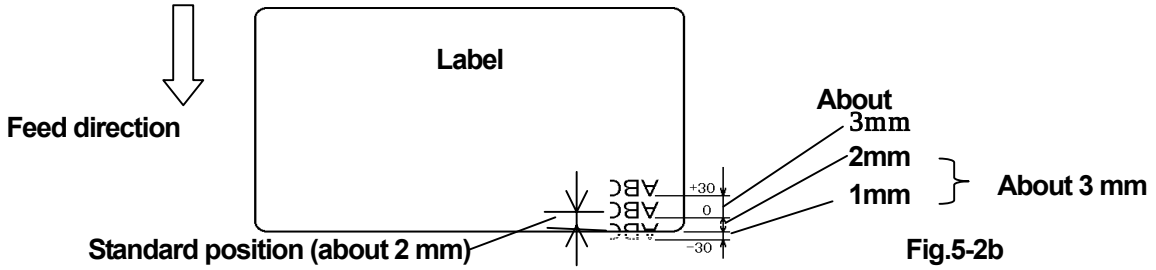

Fig.5-2b

* If the value is set to minus (-) in the cutter mode, print media may not be fed.

5.2.3 Tear-off position

Message : ‘ Tear pos / □ □ □ ’(which appears in the Tear-off /Feed ▪Tear-off mode.)

Function: At the tear-off mode or Feed・tear-off mode, Either a typical stopping or operating position is adjustable in the range of +/- 2 mm by 0.1 mm .

(In the Feed▪Tear-off mode, the printer stops at the Tear-off position after paper feed.)

Item - 30 to + 30

・ Increasing numeric data(+ direction) moves each operating position backward from the back end of the label.

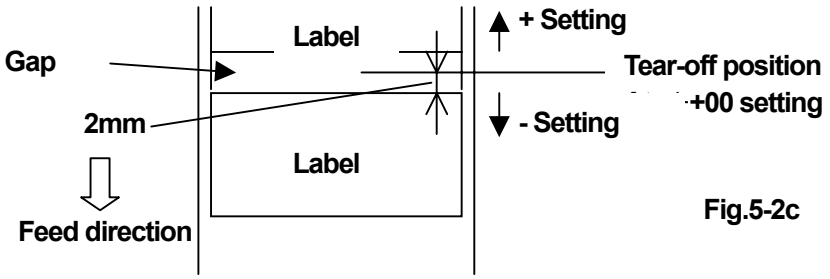

Fig.5-2c

・ In the tear-off mode, for a lager setting value (+ 10 or more), there may be cases where print media can not be fed in relation to the printing position..

・ If a label gap is 2 mm, if +1 or more is set to, there may be cases where print media can not be fed in relation to the printing position.

5.2.4 Peel-off position

Message : ‘ Peel pos / □ □ □ ’(which appears in the Peel-off mode.)

Function : At the Peel-off mode, either a typical stopping position or operating position of labels is adjustable in the range of +/- 3 mm by 0.1 mm.

Item : -30 to + 30

・ Increasing numeric data(+ direction) moves each operating position backward from the .back end of the label.

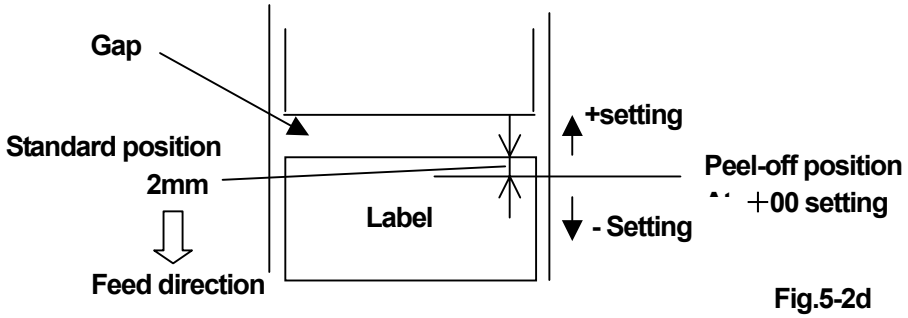

Fig.5-2d

5.2.5 Cutter position “ A Cutter position “(Cutter mode)

Message : ‘ Cut pos / □ □ □ ‘ (which appears in the Cutter mode.)

Function : Printing position is adjustable in the range of +/- 3 mm by 0.1 mm increments/decrements.

Item -30 to + 30

・ Increasing numeric data(+ direction) moves a label printing position backward from the back end of the label.

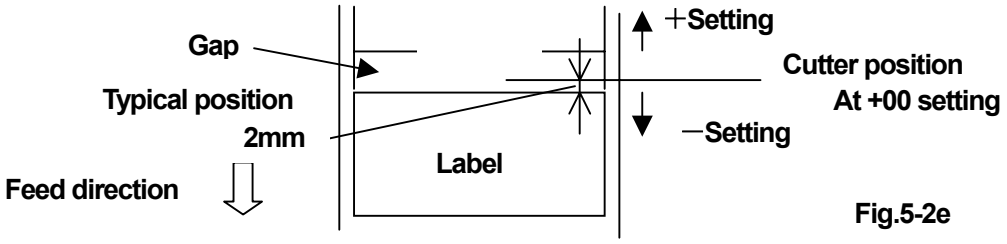

Fig.5-2e

・ In the Cutter mode, for a lager setting value(+ 10 or more), there may be cases where print media can not be fed in relation to the printing position.

・ If a label gap is 2 mm, if +1 or more is set to, there may be cases where print media can not be fed in relation to the printing position.

5.2.6 Entanglement prevention position **(which appears in the cutter mode or the Tear-off mode.)**

Message : ‘ Engulf. / □ □ □ mm’

Function : Specifies a label waiting position after tear-off / cutter operation in the Tear-off/ Cutter mode. The function can be specified in the range of 0.0mm to 99.9mm by 0.1mm.

Item 00.0 (mm)

* As the setting value increase, the front edge location of label moves away from the tear-off / cutter position proportionally.
* Use FEED / ► or PAUSE / ◄ switch for the change of value. Use DENSITY / POSITION / MENU switch for the move of digit. Use CALIBRATE LEBEL / ENTER switch to determine the value.

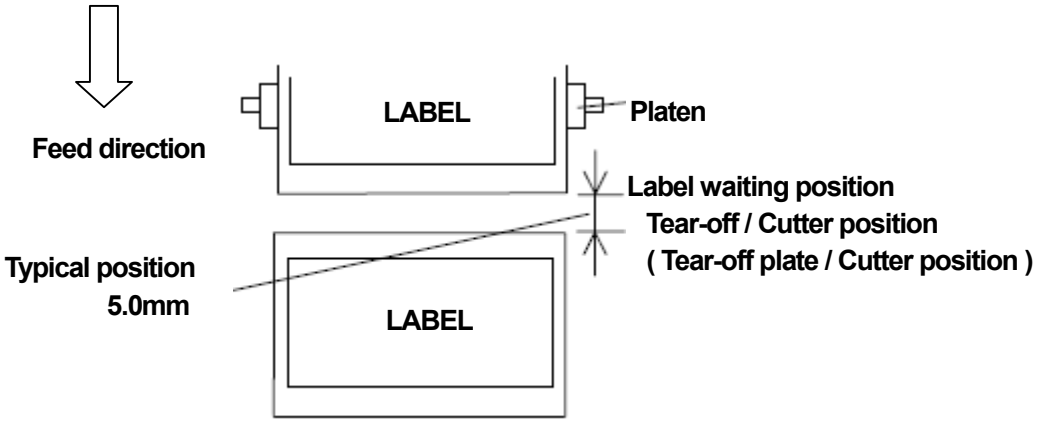

Fig.5-2f

* Initial value is set to **05. 0** mm.

5.3 HP level Learning

The function automatically adjusts to HP sensor (label detection sensor)

Once the automatic adjustment is carried out, the printer saves the result, you can print the next time without length measurement. (In the case of length measurement by manual or PGM).

For use of continuous forms, perform the following jobs with the printhead closed, but without the print media loaded in the printhead.

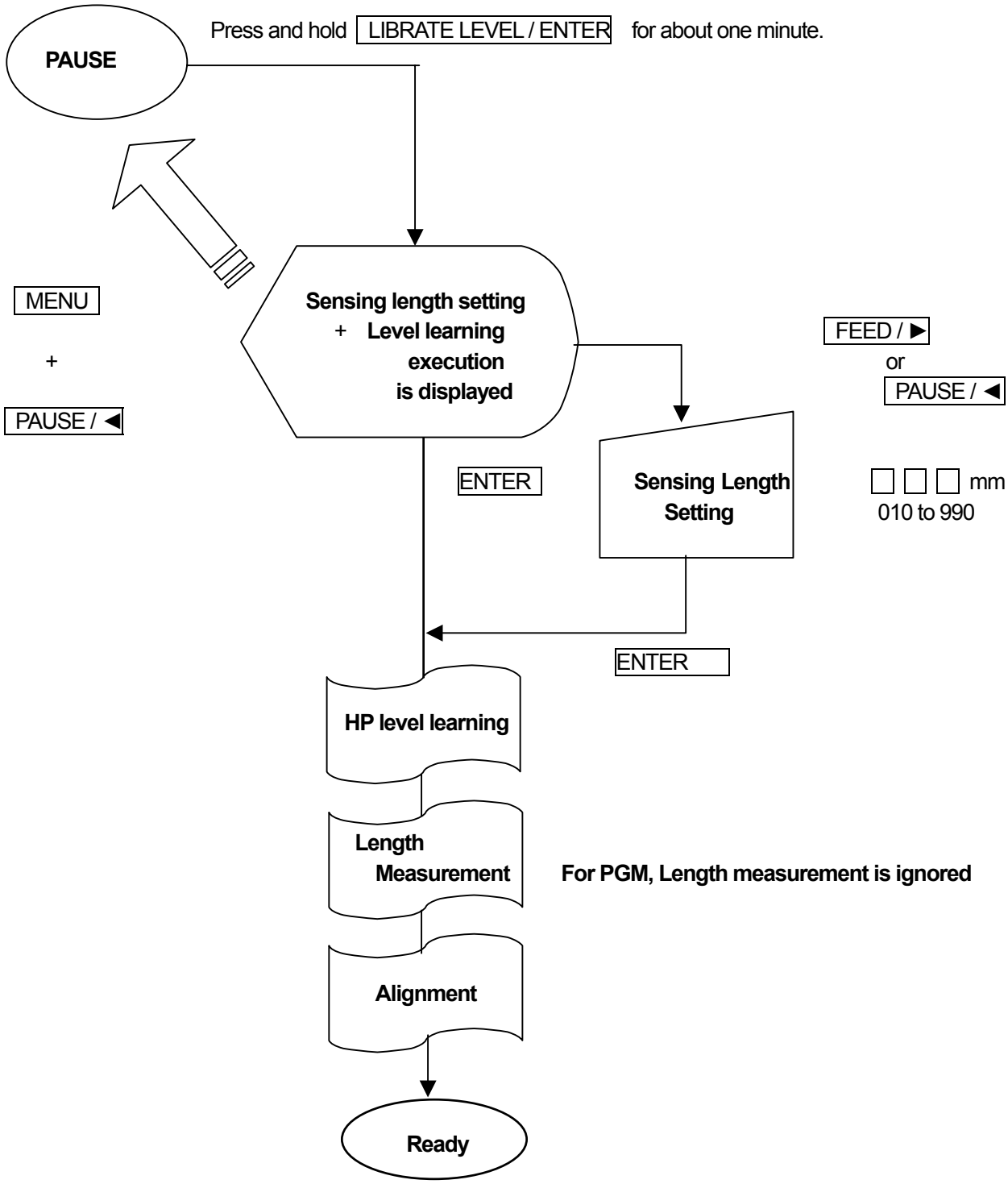

●● When replacing a label, never fail to make the HP level learning ●●

HP level learning operational procedure

For use of a roll of label paper or reflection mark, see **5.3.1**

For use of a continuous roll of paper, see **5.3.2**

5.3.1 HP level learning operational procedure (For label)

1) After loading a roll of label paper and a ribbon, turn on power-on, to get 'READY' on LCD.
2) Confirming the print media setting
   Press PAUSE / ◄ to get ' PAUSE' on LCD .
   While pressing and holding down DENSITY / POSITION / MENU , press FEED / ► switch to get
   ' Print SPD / □ □ □ mm/s ' on LCD.
   Press CALIBRATE LEVEL / ENTER switch three times and check that ' Media / Die cut ' appears on LCD.
   For continuous forms, press FEED / ► switch to get ' Media / Contin.' on LCD.
   Press CALIBRATE LEVEL / ENTER to determine it. 'Measure / Manual' appears on
   LCD. While pressing and holding DENSITY / POSITION / MENU switch, press PAUSE / ◄ switch to get
   'PAUSE ' on LCD.
3) Make a HP level learning and length measurement for label.
   In the Pause state, Pressing and holding CALIBRATE LEVEL／ENTER switch for about one second results in emitting a beeping sound and ' Calibra. / Len □□o' appears on LCD. Change a label length according to the label pitch length to be used. (Set a label length for HP level learning. HP sensor level change is sensed by feeding paper according to the set value, which is automatically adjusted to HP level.)
   Make an adjustment of the length by 10 mm increments / decrements with FEED/► / PAUSE／ ◄ switch.
   The setting value requires about 10 mm longer than the label pitch length.
   Press CALIBRATE LEVEL／ENTER switch again to perform HP level Learning .
   ' Calibra. / Busy !! appears on LCD with label feed, then length measurement is carried out, when the length measurement setting is "Manual " or "Every ". (For PGM, label alignment is performed in stead of Length measurement.). ' Measure / Busy !! ' appears on LCD with 3 to 5 label feed. After that
   HP level learning is complete with ' READY' on LCD.

) If an error arises, go to " 6. **Error occurrence and recovery".

Note : As factory defaults, the above setting value is set to 10mm. Replace the value with the label size to be used. As a guide, add from +10 to +20 mm to actual label pitch length. Use PAUSE／ ◄ or FEED / ► switch for the change value.

5.3.2 HP level learning operational procedure (Continuous forms)

1) Load a thermal-transfer ribbon, however, do not load a continuous roll of paper.(Continuos forms).
   (Remove a continuous roll paper from the print mechanism, if some paper is loaded.) then close the print mechanism after confirming no paper installation.
2) Turn the power on.
3) Change print media from label to continuous forms by using the operational panel as follows.
   Press PAUSE / ◄ to get ‘ PAUSE’ on LCD .
   While pressing and holding down DENSITY / POSITION / MENU , press FEED / ► switch to get ‘ Print SPD / □ □ □ mm / s ‘ on LCD.
   Press CALIBRATE LEVEL / ENTER switch three times to get ‘ Media / Die cut ‘ on LCD.
   For continuous forms, press FEED / ► switch to select ‘ Media / Contin.’ on LCD.
   Then press CALIBRATE LEVEL / ENTER to determine it. ‘ LBLpitch / □ □ □ . □ mm ‘ appears on LCD. While pressing and holding DENSITY / POSITION / MENU switch, press PAUSE / ◄ switch to get ‘ PAUSE ‘ on LCD.
4) Execute HP level learning for label.
   In the Pause state, Pressing and holding CALIBRATE LEVEL／ENTER switch for about one minute results in emitting a beeping sound and ‘ Calibra / Len □□o’ appears on LCD.
   Press CALIBRATE LEVEL／ENTER switch again to perform HP level Learning.
   ‘ Calibra./ Busy !! ‘ appears on LCD. Then, The printer gets ready with ‘ READY’ on LCD.
5) Open the print mechanism to load Continuous form (a continuous roll of paper) by way of running through the printhead and close it. When the print mechanism is open, the printer sounds a beep as a warning ‘ E01 Head open ‘ error on LCD. Press PAUSE / ◄ to stop the beep.
6) Press PAUSE / ◄ to get ‘ PAUSE ‘ .
7) Press PAUSE / ◄ switch again to get ‘READY ‘ with paper feed. Now, the job is complete.

) If an error arises, go to “ 6. **Error occurrence and recovery”.

5.4 Operational setting mode

Operational settings and Communication requirements configuration is performed in this mode.

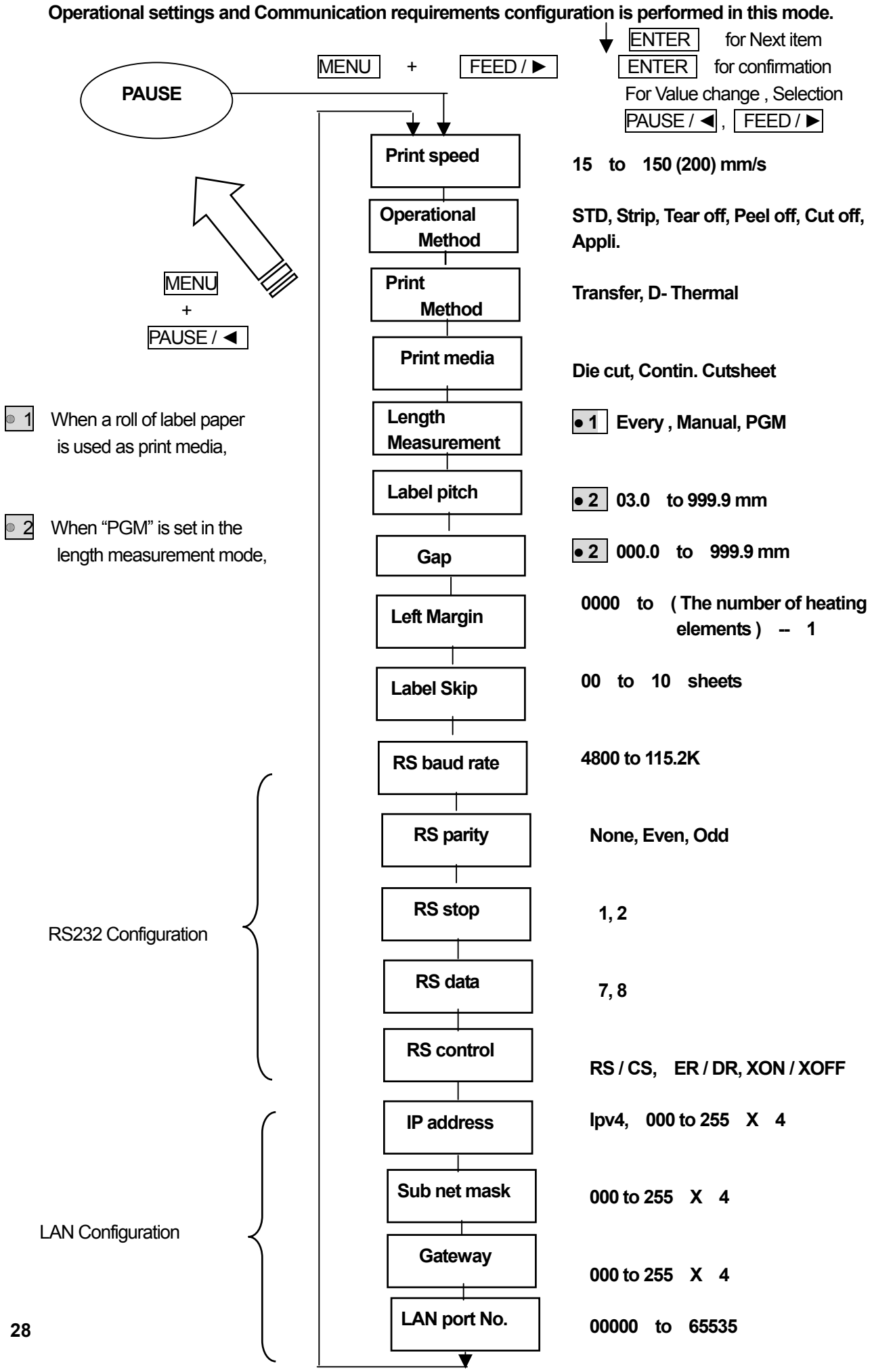

5.4.1 Print speed

Message : ‘ Print SPD / □ □ □ mm/s ‘

Function : Choose a print speed.

Item	200 mm/s	Set	200mm/sec	(200mm/sec is only available for 4012PIH, can be set to.)
	150 mm/s	Set	120mm/sec	
	120 mm/s	Set	120mm/sec	
	100 mm/s	Set	100mm/sec	
	80 mm/s	Set	80mm/sec	
	60 mm/s	Set	60mm/sec	
	40 mm/s	Set	40mm/sec	
	30 mm/s	Set	30mm/sec	
	25 mm/s	Set	25mm/sec	
	20 mm/s	Set	20mm/sec	
	15 mm/s	Set	15mm/sec	

* Since amount of heat for printhead varies in at print speed, adjust a print speed to the ribbon / print media you select (Maladjustment may cause poor printing.).
* The Setting becomes effective immediately after an exit from the operational setting mode by using the panel switch.
* The initial setting value is 100 mm/s.

5.4.2 Operational method

Message : ‘ PRT Mode / □ □ □ □ □ □ ‘

Function : Chooses how to process print media.

Item
- STD : Print mode with label feed.
- Strip : After label feed, in addition, the label advances the gap position between labels to tear it off manually.
- Tear-off : Print mode you can tear off the label paper by hand at the gap between labels.
- Peel-off : Print mode allows labels to peel off automatically (Only available when Label is selected as media.)
- Cut-off : Print mode used in an auto-cutter-equipped printer

Note: The auto-cutter is optional. ‘Cutter’ only appears on LCD, if it is loaded. Naturally, you can not set the cutter function with the auto-cutter unloaded.

* The Setting becomes effective after an exit from the operational setting mode by using the panel switch.
* The initial setting value is set to “ Cutter “.

5.4.3 Print method

Message : ‘ PRT Meth / □ □ □ □ ‘

Function : Selects the following print method

Item
- Transfer : Uses the thermal transfer method (with thermal transfer ribbon)
- D.Therm : Uses the direct thermal method (with the heat-sensitive paper)

* If you select “Thermal”, the existence of ribbon sensor is ignored.
* The setting becomes effective immediately after an exit from the operational setting mode.
* The initial setting value is set to “ Transfer “.

5.4.4 print media

Message : ` Media / □ □ □ □ □ □ ‘

Function: Chooses media to be printed.

item
- Die cut : Uses a label paper.
- Contin. : Uses continuous forms.

* Since the role of the Home position sensor depends on a selected item, never fail to meet the selected item with media to be selected.

* When a paper is fed by using the panel switch, for label, press FEED/ ▶ switch to feed one sheet of label.

* The setting becomes effective after an exit from the operational setting mode by using the panel .

* The initial setting value is set to “ Label “. ▶

5.4.5 Label measurement

Message : ‘Measure /□ □ □ □ □ ‘ (Appears on LCD only when label is selected as print media.)

Function : Decides one label processing whether your printer uses label data from automatic measurement or input data from the panel.

Item
- Every : Automatically performs a length measurement at every-time power-on. Several sheets of labels preliminary advance for the label length measurement (The label feed is subject to its . length) The mode is used, if frequent label changes occur.
- Manual : Uses the initial data you make an measurement manually, the following operation uses its data saved.. So, you can save labels without paper feed for the measurement at every power-on. When using your printer for the first time, or replacing with different type of label, never fail to perform the length measurement.
- PGM : Input data of a label length, a gap length from the panel allow control of label behavior.

* The setting becomes effective immediately after an exit from the operational setting mode with the panel switch.

* The initial setting value is set to “Manual “.

5.4.6 Label pitch length

Message : ‘ LBLpitch / □ □ □ . □ mm ‘ (Appears on LCD, when PGM is selected in length measurement)

Function : Sets a label length..

Item 000.0 （ in millimeters）

* Label lengths are shown as bellow.

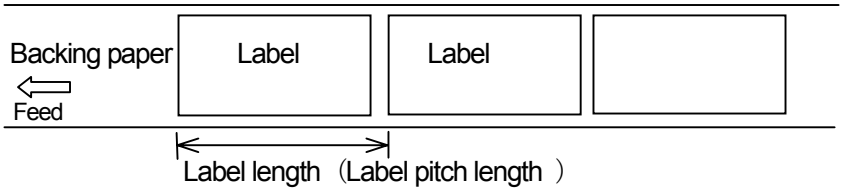

・ The item becomes effective, when the selected item is ‘PGM’ in ‘Measure’.

・ Improper setting does not guarantee normal operation.

* Setting becomes effective after the exit from the operational setting mode using the panel switch.

* The default value is 050. 0 mm.

5.4.7 Gap length

Message : ‘ Gap len / □ □ □ . □ mm ‘ (This appears on LCD, when the selected item is PGM in length measurement)

Function : Sets a gap length..

Item 000.0 （ in millimeters）

* Gap lengths are shown as bellow.

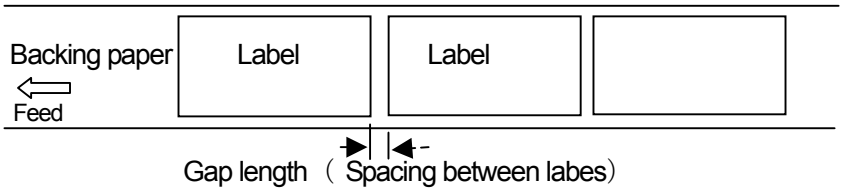

* The item becomes effective, when the selected item is ‘PGM’ in ‘Measure’.

* Improper setting does not guarantee normal operation.

* The setting becomes effective after the exit from the operational setting mode using the panel switch.

* The default value is 003. 0 mm.

5.4.8 Left margin

Message : ‘ L. margin / □ □ □ □ ‘

Function : Fills blanks on the left of printed area

Item : 0 to (The total number of heating element) – 1 (dots)

* As a setting value is bigger, printing moves to the right.

* The printable area decreases because the data lying off the right edge of the label due to the left margin setting can not be printed out.

* The setting becomes effective after the exit from the operational setting mode using the panel switch.

* The default value is 0.

< Example >

- ● Starting point of printing
- ○ Physical starting point

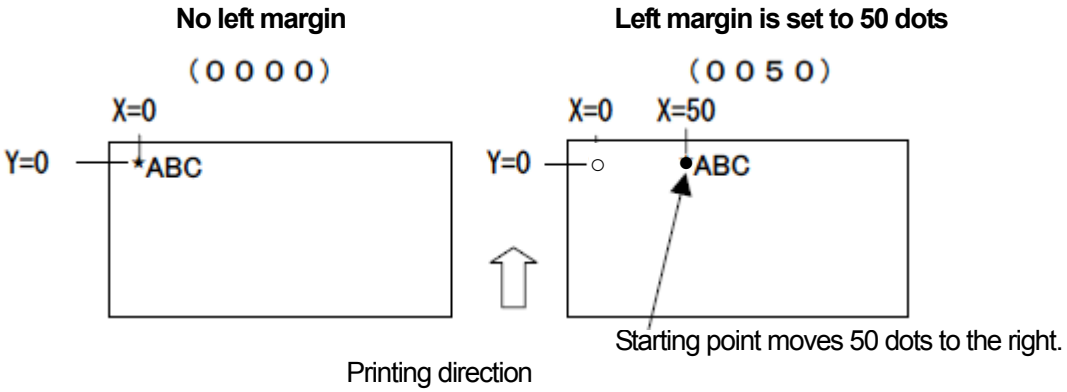

5.4.9 Label skip

Message : ‘ Label Skip / □ □ ‘

Function : If labels come off, the imaginable labels are skipped. Specifies the number of labels to be skipped.

Item : 00 to 10 sheet of labels

* Setting becomes effective after the exit from the operational setting mode using the panel switch.

* The default value is 01.

5.4.10 Communication speed

Message : 'RS baud / □ □ □ □ □ □ '

Function: Specifies a serial communication speed (Baud rate)

Item	115.2 K	Set	115200 bps
	57.6 K	Set	57600 bps
	38.4 K	Set	38400 bps
	19.2K	Set	19200 bps
	9600	Set	9600 bps
	4800	Set	4800 bps

* Never fail to match the rate with communication speed of your host computer.
  (Different setting rate will not be guaranteed in communication.)
* Setting becomes effective after the exit from the operational setting mode using the panel switch.
* The initial setting value is set to " 9600 "as a baud rate.

5.4.11 Parity

Message : ' RS Pari. / □ □ □ □ □ '

Function : specifies parity bits

Item	None	No parity
	EVEN	Choose even parity.
	Odd	Choose odd parity.

* Never fail to match the number of stop bits with that of your host computer.
  (Different setting value will not be guaranteed in communication.)
* The setting becomes effective after restarting your printer (By warm start or by resetting).
* The initial setting value is set to " None "as parity bits.

5.4.12 Stop bit

Message : ' RS Stop / □ '

Function : Specifies stop bits.

Item	1	Set "Stop bits" to 1.
	2	Set "Stop bits" to 2..

* Never fail to match the number of stop bits with that of your host computer.
  (Different stop bit setting will not be guaranteed in communication.)
* The setting becomes effective after restarting your printer. (by warm start or by resetting).
* The initial setting value is set to " 1 "as stop bits.

5.4.13 Data length

Message : ' RS Data / □ '

Function : Specifies data length.

Item	7	Set "Data length" as 7 bits.
	8	Set "Data length" as 8. bits.

* Never fail to match the number of data length with that of your host computer.
  (Different data length settings will not be guaranteed in communication.)
* The setting becomes effective after restarting your printer (Warm start or by resetting.).
* The initial setting value is set to " 8 "as data length.

5.4.14 Communication control

Message : ‘ RS cont / □ □ □ □ □ □ ‘

Function: Chooses the handshakes method of RS232C (Communication control, when data buffer is full.)

Item	RS/CS	Controls by RS/CS line.
	ER / DR	Controls by ER/DR
	XON/XOFF	Controls by XON/XOFF codes.

RS(RTS)···· 8 pin	Return to send (output).: Requests data to the party (computer) on the other end line with “SPACE” (ON, about +7V).
CS(CTS)···· 7 pin	Clear to send (input) : the line shows that the preparation for reception of the party. (host computer) is ready. “SPACE”(ON, about +7 V) on the line allows a status return.
DR(DSR)···· 4 pin	Data Set Ready (input) : The line shows that Data from the party(host computer) gets ready.
ER(DTR)····6 pin	Data terminal Ready (Output). The line shows the printer is ready.
XON ···· Cord(11H)	Code shows that the receiver is enable for reception.
XOFF ·· Cord(13H)	Code shows that the receiver is disable for reception.

・The selection of the item is mutually exclusive.
Example) If RS/CS is selected, XON/OFF cords cannot occur at the same time.

* In any case, A program should be designed to stop data transfer, if the data buffer is full (RS=OFF or XOFF).
* Difference between actual control expected and the settings will not be guaranteed in communication.)
* The setting becomes effective after restarting your printer (by warm start or by resetting.)
* The default value is set to “ RS/CS “.

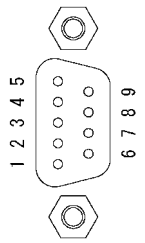

Connector shape
(Printer side)

5.4.15 IP address

Message : ‘ IP addr / □ □ □ . □ □ □ . □ □ □ . □ □ □ ‘

Set 12 place value by using MENU switch for a shift.

Function : specifies a IP address for the printer

* Setting format is “ ☼☼☼.☼☼☼.☼☼☼.☼☼☼ “
  Each “☼☼☼ “ can be set to “000” to “256” in a decimal number, however, “000.000.000.000” and “256.256.256.256” can not be set to.
* Never set the IP address to network address, broadcast address, or local loop address.
* The setting becomes effective after restarting your printer (by warm start or by resetting.)

5.4.16 Net mask

Message : ‘ Net mask / □ □ □ . □ □ □ . □ □ □ . □ □ □ ‘

Set 12 place value by using MENU switch for a shift.

Function : Specifies a net mask address for the printer

* Setting format is “ ☼☼☼.☼☼☼.☼☼☼.☼☼☼ “
  Each “☼☼☼ “ can be set to “000” to “256” in a decimal number, however, “000.000.000.000” and “256.256.256.256” can not be set to.
* The setting becomes effective after restarting your printer. (Warm start or by resetting.)

5.4.I7 Gateway

Message : ‘ Gateway / □ □ □ . □ □ □ . □ □ □ . □ □ □ ‘

Set 12 place value with MENU switch for a shift.

Function : specifies a gateway address for the printer

* Setting format is “ ☼☼☼.☼☼☼.☼☼☼.☼☼☼ “
  Each “☼☼☼ “ can be set to “000” to “256” in a decimal number, however, “000.000.000.000” and “256.256.256.256” can not be set to.
* The setting becomes effective after restarting your printer (Warm start or by resetting.)

5.4.18 Port number

Message : ‘ LAN port / ‘ □ □ □ □ □ ‘ ‘

Function : Specifies a listen port number for the printer

* The setting format is “ ☼☼☼☼☼ “
  “☼☼☼☼☼ “ can be set to “00000” to “65535” in a decimal number.
* It is recommendable to set to “010242 to “65535” without well-known port number.
* The port number loses its meaning, if FTP is selected as protocol setting.
* The setting becomes effective after restarting your printer. (by warm start or by resetting.)

5.5 Configuration

While pressing and hold down CALIBRATE LEBEL / ENTER switch. turn the power on to enter into this mode.
In the mode, Each parameter in the printer is configured for your own use.
Usually, there will be no problem to use factory default settings because
the printer is organized for user-environment before shipment.

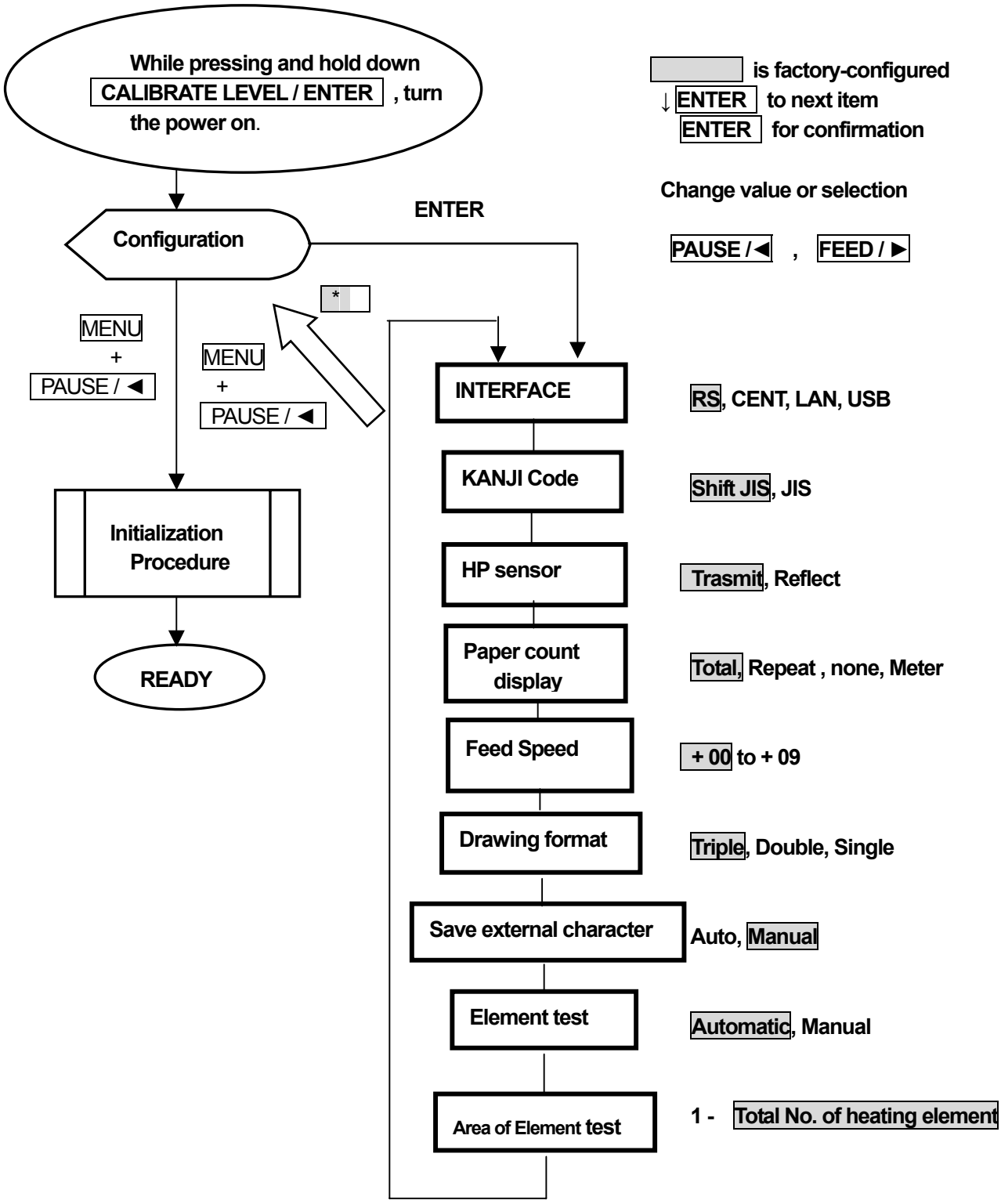

5.5.1 Interface

Message : 'I / F / □□□□ ' '

Function : specify a way to connect with the host computer.

Item	RS	by way of Serial Interface (RS232C).
	Centro	by way of parallel interface (Centronics)
	LAN	Use LAN interface(100 BASE -TX)
	USB	Use USB interface (USB V1.1)

In the above interface, Centronics, LAN, and USB interface are optional.

* Only one selected interface item becomes effective.
* A selected interface can make communication possible.
  (The printer can not receive a message from not specified interface correctly.
* In the case of Centronics, a status message can not be sent to.
* The setting becomes effective after the exit from the configuration mode.
* The initial setting value is set to RS. (If one of the above options is installed, the option is selected as its initial value.) .

5.5.2 Kanji code

Message : ' Ch. code / □□□□□□ '

Function : Specify Kanji cord you want to use.

Item	SET JIS	Use Shifted JIS code
	JIS	Uses JIS cord

* Never fail to meet the item with use-character cord.
* The setting becomes effective after the exit from the configuration mode with the panel switch.
* The initial (default) setting value is set to " Shift IS ".

5.5.3 Paper sensor

Message : ` HP sens. / □□□□ `

Function : Specify a sensor type for paper to be used.

Item	Transmit
	Reflect

A reflection sensor is available as an option The printer is reflection-only model.

* Specifies the function in keeping with your printer, label used
* Therefore, the model is only available for "Reflection"., never set to " Transparent "
* The setting becomes effective after the exit from the configuration mode with the panel switch.
* The initial (default) setting value is set to " Transparent ".

5.5.4 Display the number of sheets printed

Message : ‘ Counter / □ □ □ □ □ ‘

Function : Specify display function for the number of sheets printed

Item
- None Not display the number of sheets
- Repeat Display the number of repeatedly printed sheets.
- Total Display the accumulated number of sheets printed

* The number of print sheets is displayed in the lower part on LCD.
  For Repeat, ‘ □ □ □ □ □ ‘ means ; The number of printed sheets.
  For Total, ‘ □ □ □ □ □ ‘ means ; The number of sheets printed after power-on
* The number of sheets printed return to ` 00000’ , after initialization , after turning the power off and on again, or by reset operation.
* The setting becomes effective after the exit from the configuration mode with the panel switch.
* The initial (default) setting value is set to Repeat .

5.5.5 Paper feed speed

Message : ‘Feed SPD / □ □ □ ‘

Function : specify a paper feed speed manually

Item : + 00 to + 09

* when + 00 is set to, The speed of paper feed is the same as that of printing.
* Only back feed speed is changeable, paper feed speed is constant.
* The initial value is set to + 00 .

5.5.6 Drawing format

Message : ‘IMG mem. / □ □ □ □ □ ‘

Function : Specify the number of drawing memories

Item
- Single
- Double
- Triple

* Do not change the item in general use. It is only used to extend the print area. (the maximum feed length is 999 mm.). When the item is modified, the drawing speed gets slow.
* The setting becomes effective after the exit from the configuration mode with the panel switch.
* The initial (default) setting value is set to Triple .

5.5.7 Saving external characters

Message : ‘EFT save / □ □ □ □ □ ‘

Function : Specify the method to save (back up) registered data to internal ROM.

Item
- Auto The external characters are written to the internal ROM automatically, when entering commands other than that for the external character registration.
- Manual The external characters are written to the internal ROM by a panel setting.

* After external character registration, when ‘ $ Ready ‘ appears on LCD, and press [CALIBRATE LEVEL / ENTER] switch to save(back up) the characters to the internal ROM.
  For details, see “4.4 external character back-up “ .
* The function becomes possible of reading of the external characters from the inside printer
* The setting becomes effective after the exit from the configuration mode with the panel switch.
* The initial (default) setting value is set to Manual.

5.5.8 Heating element test

Message : ‘ Elem. Ck / □ □ □ □ □ ‘

Function : Specify the method of element test (Detection of abnormal heating of heating element)

Item
- Auto — Make a heating element test automatically
- Manual — Make a heating element test manually

* In models that the element test is not feasible, the item is not displayed.
* The test timing is as below;

  For “automatic”,

  During printing, The element test is executed in the pause state except error occurrence.

  For “Manual “,

  In the pause state, while pressing MENU switch, press the ENTER + FEED / ► switches combination. ‘ Element Ck /Go Can ‘ appears on LCD.

  After underlining ‘Go’ by using FEED / ► switch, press ENTER switch to execute the test.

  ‘ # Pause ‘ appears on LCD. For details, see “ 4.3 Executing an element test “.

  The test is performed one time for a specified area .
* During the element test, ‘ # ’ following by ‘ Ready / Pause ‘ appears on LCD.
* if errors occur in the element test, try to use the printer after changing ‘ Element CK ‘ Into ‘ Manual ‘ , or change the printhead in question. however, it is recommendable to change the printhead into new one, because poor print quality may occur.
* The setting becomes effective after the exit from the configuration mode with the panel switch.
* The initial (default) setting value is set to Auto.

5.5.9 Element test area setting

Message : ‘ Element LMT / □ □ □ □ – □ □ □ □ ‘

Function : The area that make a check of the element of printhead is specified by dots.

Set a 8-digit number by using a simple shift of MENU switch.

* In models that the element test is not feasible, the item is not displayed.
* Only the part of printhead in use can be made a check .
* The setting becomes effective after the exit from the configuration mode with the panel switch.
* The initial (default) setting value is set to “ 0001 --- Total number of elements.”

5.6 Table of panel setting function

(For details , see 4.1 to 5.5.) Underlined characters are default values.

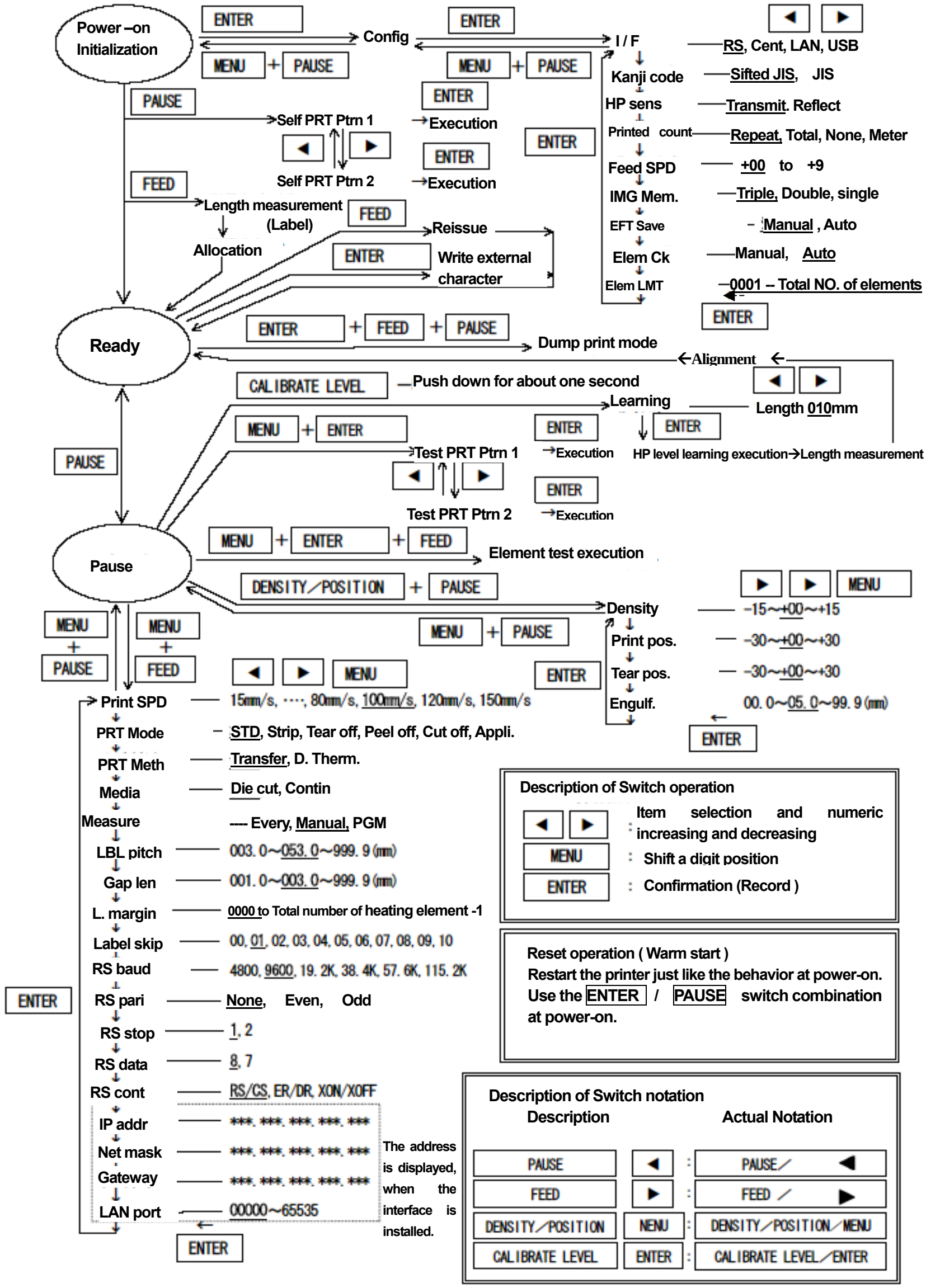

Description of Switch operation

◀ ▶	: Item selection and numeric increasing and decreasing
MENU	: Shift a digit position
ENTER	: Confirmation (Record)

Reset operation (Warm start)

Restart the printer just like the behavior at power-on. Use the ENTER / PAUSE switch combination at power-on.

Description of Switch notation

Description			Actual Notation
PAUSE	◀	:	PAUSE／ ◀
FEED	▶	:	FEED ／ ▶
DENSITY／POSITION	MENU	:	DENSITY／POSITION／MENU
CALIBRATE LEVEL	ENTER	:	CALIBRATE LEVEL／ENTER

5.7 Panel Setting Guide (Example)

5-7--1 Changing print density (Print density)

The following steps assumes that your printer is in the ‘ Ready ‘ state and you want to change a print density.

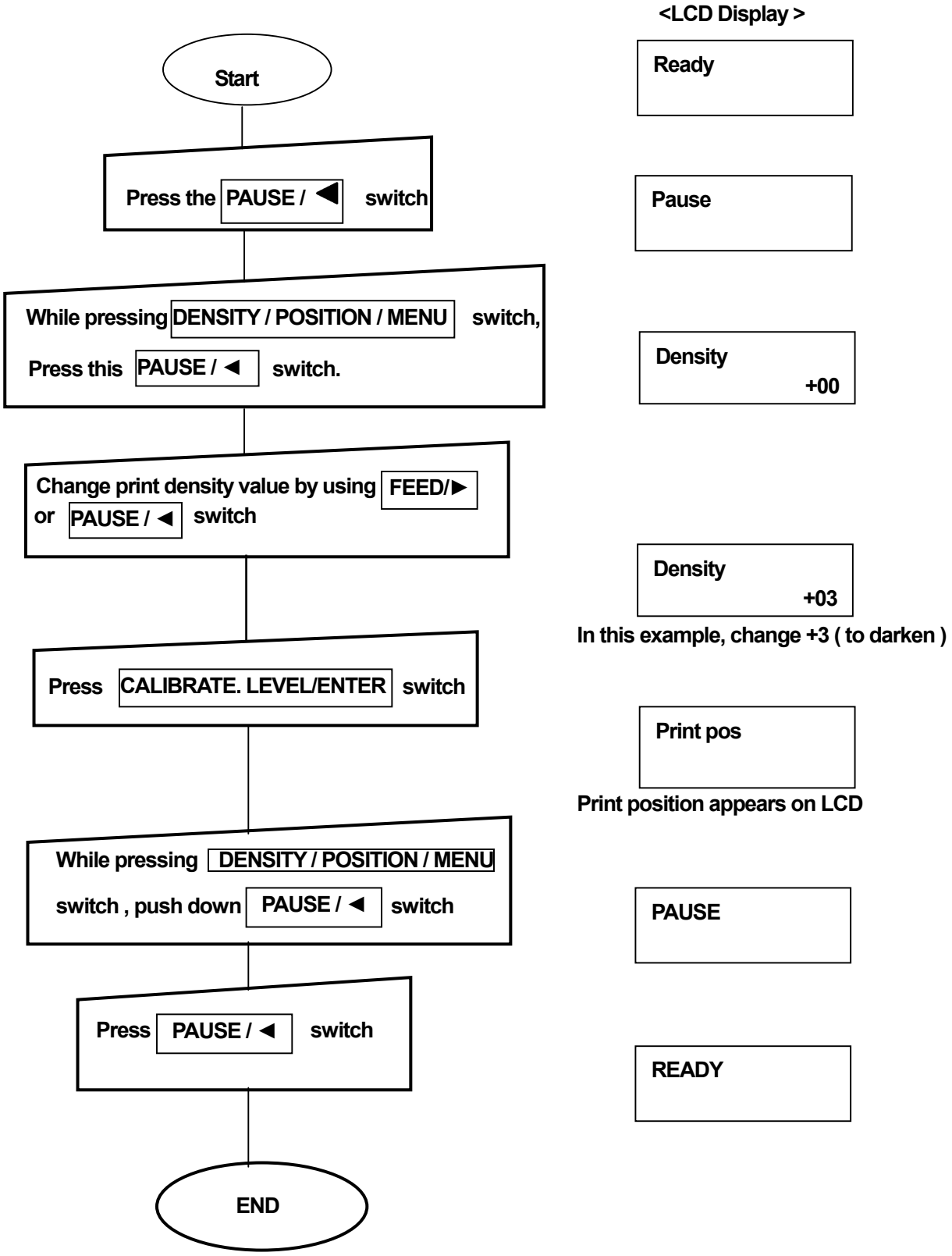

By the above operation, Print density has been modified.

5.7.2 Changing printing position (Print position)

The following example describes the method to change a print position setting on the condition that your printer is in the ‘ Ready ‘ state.

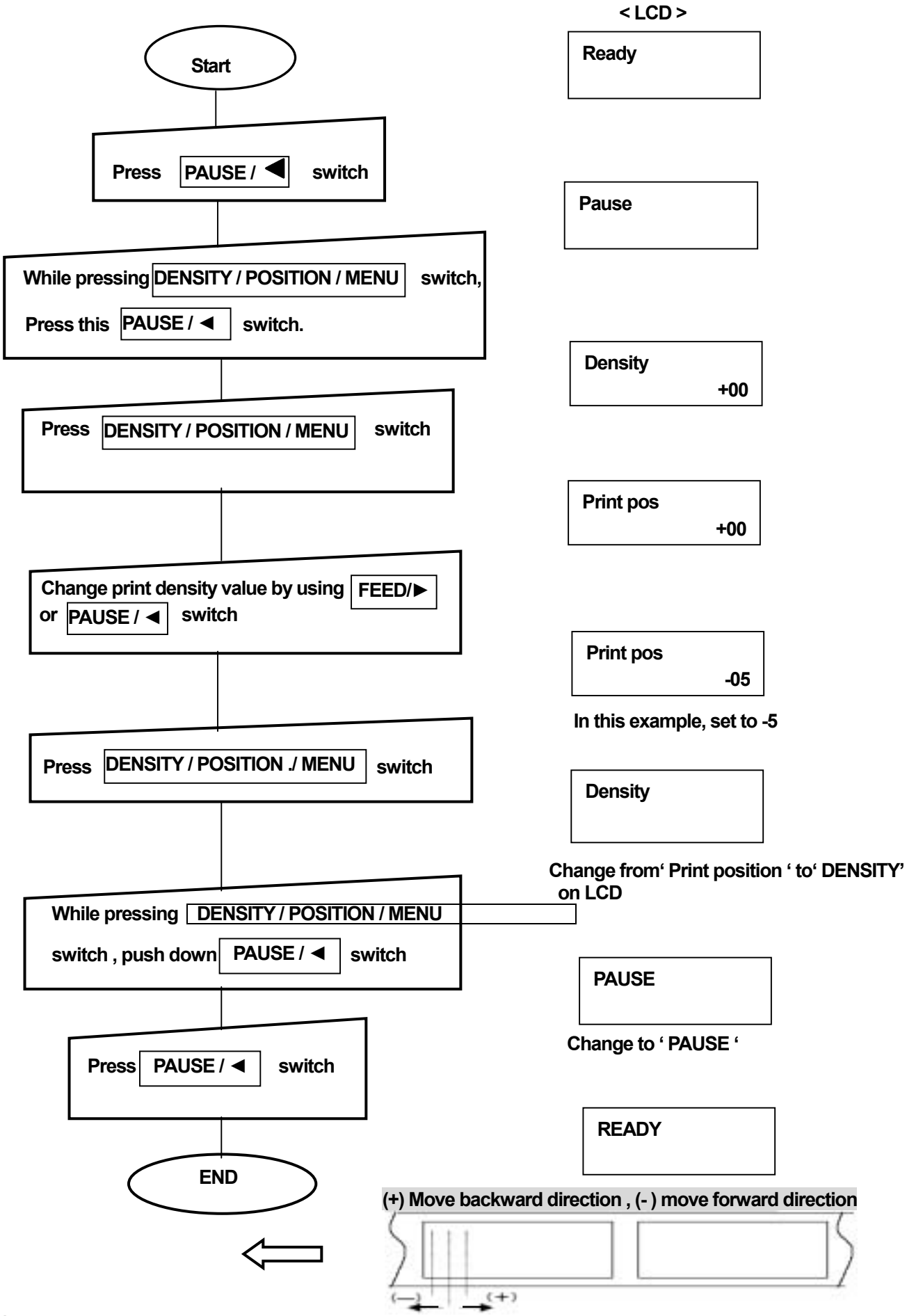

5.7.3 Changing print speed (Print speed)

The following example describes how to change a print speed setting from the current 20 mm/s to 30mm/s in the ready state.

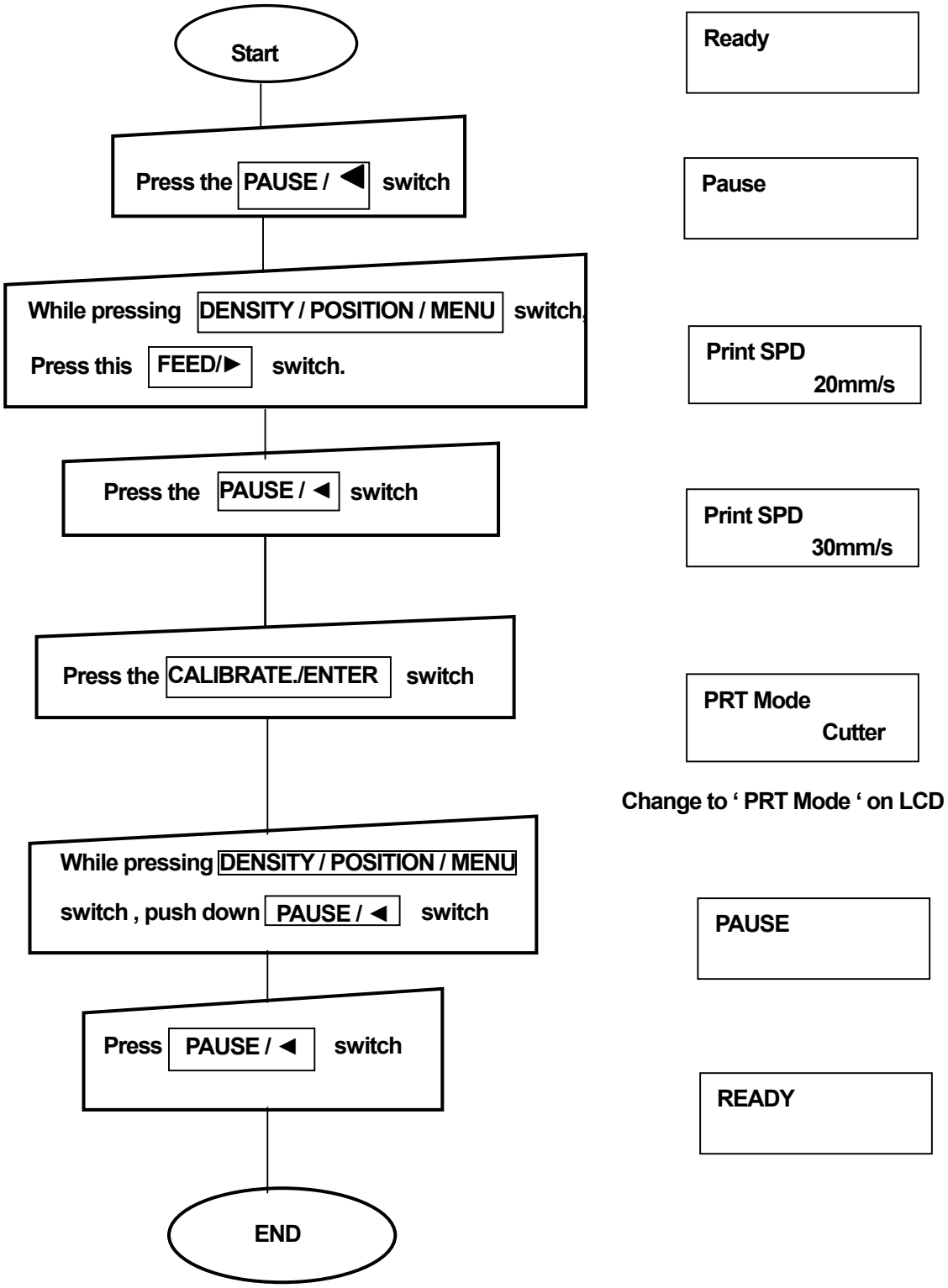

By the above operation, you can enjoy printing with new print speed.

6 Error occurrence and recovery

- If error occurs, a buzzer always sounds. a red error LED lights.
- Some errors may make report to a host computer directly connected.

Errors are classified into the following items.

Mechanical related errors		
RBN Empty	E02	When no ribbon is detected,
PPER Empty	E03	When the sensor detects paper-out,
PaperJAM	E04	When the sensor detects a jammed or irregular skew feeding paper,
Cutter	E05	Paper jamming or cutter failure in the cutter part.
Overheat	E07	When the sensor detects a high temperature (over 70 ˚C) on the printhead,
Element	E08	when the sensor detects irregularities of thermal head.
Lv Error	E15	When the sensor can not detect the gap between labels in HP level learning.
Communication related errors		
Framing	E51	When communication speed (RS232C baud rate) does not match with that of your host computer connected. (very rare occurrence)
Parity	E52	When communication condition (RS232C parity) does not match with that of your host computer connected.
Buf full	E53	With receiving buffer full, when additional data receives,
Analysis errors		
Syntax	E55	When misspelling or invalid data in command occurs.
Paramet.	E56	When parameter value of a command are out-of-bounds area.
Other errors		
Mismatch	E09	When the printer can not find a defined resource.
LAN board ERR	E67	When the printer can not detect the presence of resource
LAN Receive	E60	When the printer can not receive a message from LAN

When an error is occurred, each return method is summarized as follows.

6.1 Mechanical related errors

6.1.1 RBN Empty

Return method	Beep	ERROR lamp State	LCD	
			Upper line	Lower line
When an ribbon-out is detected, (Printing stops)	ON	ON	E02	RIBBON-OUT
Push down KEY switch	OFF	ON	E02	RIBBON-OUT
Open a printhead cover, reload a ribbon	OFF	ON	E02	RIBBON-OUT
Close the printhead part	OFF	ON	E02	RIBBON-OUT
Push PAUSE switch	OFF	OFF	PAUSE	--
Push down PAUSE switch. (Perform alignment and do printing continuously)	OFF	OFF	READY	---

6.1.2 PPER Empty

Return method	Beep	ERROR lamp State	LCD	
			Upper line	Lower line
When a paper-out error is detected, (Printing stops)	ON	ON	E03	PAPER-OUT
Push down KEY switch	OFF	ON	E03	PAPER-OUT
Open a printhead cover, reload media	OFF	ON	E03	PAPER-OUT
Close the printhead part	OFF	ON	E03	PAPER-OUT
Push PAUSE switch	OFF	OFF	PAUSE	------

6.1.3 Paper JAM

Return method	Beep	ERROR lamp State	LCD	
			Upper line	Lower line
When paper jamming is detected, (Printing stops)	ON	ON	E04	PAPER JAMMING
Push down KEY switch	OFF	ON	E04	PAPER JAMMING
Open a printhead cover, reload media	OFF	ON	E04	PAPER JAMMING
Close the printhead part	OFF	ON	E04	PAPER JAMMING
Push PAUSE switch	OFF	OFF	PAUSE	------
Push down PAUSE switch. (Perform alignment and do printing continuously	OFF	OFF	READY	------

6.1.4 Cutter

Return method	Beep	ERROR lamp State	LCD	
			Upper line	Lower line
When an error is detected	ON	ON	E05	Cutter error
Push down KEY switch	OFF	ON	E05	Cutter error
Turn off the power	OFF	-----	-----	----
Remove papers from the cutter part, if paper jamming occurs. If not, look for the cutter connector that may have worked loose.	-----	------	------	------
Power on again	OFF	OFF	READY	------

With the power turned back on, the system returns from error, however, all the data received until now in the working area are lost by the return operation.

6.1.5 Overheat

The phenomenon may occur due to increased temperature of printhead from continuous printing having a high printing ratio.

Return method	Beep	ERROR lamp State	LCD	
			Upper line	Lower line
When the error is detected, (Printing stops)	ON	ON	E07	overheat
Push down KEY switch	OFF	ON	Open the print head	PAPER JAMMING
Open printhead cover	OFF	ON	Open the print head	PAPER JAMMING
When the beep sounds, close the printhead part	OFF	ON	Close the print head	PAPER JAMMING
Push PAUSE switch	OFF	OFF	PAUSE	------
Push down PAUSE switch. (Perform alignment and do printing continuously	OFF	OFF	READY	------

Printing can not be resumed unless its temperature drops.

6.1.6 Element

Return method	Beep	ERROR lamp State	LCD	
			Upper line	Lower line
When an error is detected, (Printing stops)	ON	ON	E08	Burned-out Element
Push down KEY switch	OFF	ON	E08	Burned-out Element
Push PAUSE switch	OFF	OFF	PAUSE	-----
Push PAUSE switch	OFF	OFF	READY	------

After recovery operation is performed, the display for the detected element error does not appear on LCD. Powering the printer off and on again , or warm start allows the error display.

6.1.7 LV error

Possible cause of occurrence :

* When continuous forms (a continuous roll of paper) are used
* When there is not enough (shortage or improper) sampling area (length setting) for label
* When there is not enough difference of light transparency (or reflection) between label and its backing paper.
* When a label detection does not work because of sensor failure and the like.

Return method

Return method	Beep	ERROR lamp State	LCD	
			Upper line	Lower line
When the error is detected,	ON	ON	E15	Level error
Push down KEY switch	OFF	ON	E15	Level error
Open printhead cover, check print media, if continuous forms are loaded, remove them from the print mechanism	OFF	ON	E15	Level error
Close the printhead part	OFF	ON	E15	Level error
Push PAUSE switch	OFF	OFF	PAUSE	------
Push PAUSE switch	OFF	OFF	READY	------
Do HP level learning again				------

* when a continuous forms are used, change ‘ print media ‘ to ‘continuous forms’. .
* Please contact us or our distributor which you made a purchase, when the same error occurs again, though you power the printer off and on again and try to do HP level learning again..

6.2 Communication related error

6.2.1 Framing

Return method	Beep	ERROR lamp State	LCD	
			Upper line	Lower line
When the error is detected, (On the instance, reception stops)	ON	ON	E51	Framing
Push down KEY switch	OFF	ON	E51	Framing
Turn your printer back on (Off /ON)	OFF	OFF	READY	-------
Reset communication condition (panel setting)	OFF	OFF	READY	-------
Turn your printer back on	OFF	OFF	READY	------

* With the power turned back on, the system returns from error, however, all the data received until now in the working area are lost by the return operation. The error is displayed at the option setting.

6.2..2 Parity

Return method	Beep	ERROR lamp State	LCD	
			Upper line	Lower line
When the error is detected, (On the instance, reception stops)	ON	ON	E52	Parity
Push down KEY switch	OFF	ON	E52	Parity
Turn your printer back on (Off /ON)	OFF	OFF	READY	-------
Reset communication condition (panel setting)	OFF	OFF	READY	-------
Turn your printer back on	OFF	OFF	READY	------

* With the power turned back on, the system returns from error, however, all the data received until now in the working area are lost. by the return operation.

6.2.3 Buf full

Return method	Beep	ERROR lamp State	LCD	
			Upper li ne	Lower line
When the error is detected, (On the instance, reception stops)	ON	ON	E54	Buffer full
Push down KEY switch	OFF	ON	E54	Buffer full
Turn your printer back on (Off /ON)	OFF	OFF	READY	-------

* The error occurs, when the data transferred to the printer is greater than the volume limit of 'Buffer full ' (available memory is 256 bytes)
* Check communication condition, cables and connections.
* In the XON / XOFF mode, the error occurs at the point of a 256 k byte remaining memory.
* With the power turned back on, the system returns from the error state.
* All the data received until now in the working area are lost by return operation.

6.3 Analysis errors

6.3.1 Syntax

Return method	Beep	ERROR lamp State	LCD	
			Upper line	Lower line
When the error is detected,	ON	ON	E55	Syntax
Push down KEY switch	OFF	ON	E55	Syntax
Turn your printer back on	OFF	OFF	READY	-------
Reset an external command	OFF	OFF	READY	-------

* □ □ □ shows a command name caused by an error. After determining the cause of failure, Turn your printer back on to return to 'READY'.
* All the data received until now in the working area are lost by return operation.

6.3.2 Paramet.

Return method	Beep	ERROR lamp State	LCD	
			Upper line	Lower line
When the error is detected,	ON	ON	E55	Parameter
Push down KEY switch	OFF	ON	Detected error description	
Turn your printer back on	OFF	OFF	READY	-------
Reset an external command	OFF	OFF	READY	-------

* The description of the error is displayed. After checking the cause of failure, Turn your printer back on to return to 'READY'. .All the data received until now in the working area are lost by return operation.

6.4 Other errors

6.4.1 Mismatch

As an example of the errors, when you select the cutter mode with no cutter loaded, the error occurs.

Return method	Beep	ERROR lamp State	LCD	
			Upper line	Lower line
When the error is detected,	ON	ON	E09	Mismatch

Push down KEY switch	OFF	ON	Operation method	Cutter
Turn your printer back on	OFF	OFF	READY	-------
Reconfiguration from panel	OFF	OFF	READY	-------

* □ □ □ shows ‘ MOV’ , ‘ IFC ‘and so on.
* Press PAUSE switch to display an error description for your confirmation.
* After power-off, check cables and connections in the system.
* After displaying ‘ Operation method Cutter ‘ , The operation mode is changed into the FEED mode.

6.4.2 LAN board ERR

(1) Check condition
* At power-on (At Initialization)
* When the settings are changed from panel or by entering a command,

(2) Check method
* When LAN board can not detected, though LAN is specified.
* When data are set in LAN board

(3) Possible cause of occurrence
* Set value is invalid.
* Not LAN board loaded

(4) Return method

Return method	Beep	ERROR lamp State	LCD	
			Upper line	Lower line
When the error is detected,	ON	ON	E67 LAN	Board error
Push down KEY switch	OFF	ON	E67 LAN	Board error
Turn your printer back on	OFF	OFF	READY	-------

* Please contact us or our distributor which you made a purchase, when ‘ LAN board error ‘ occurs again, though you turn on the power again after powering off your printer.

6.4.3 LAN Receive

(1) Check condition
* When data are received from your host computer (LAN connection) ,

(2) Check method
* When an error is detected during internal processing, (when data can not be received)

(3) Possible cause of occurrence
* .LAN settings does not meet between your host computer and the printer sides.

(4) Return method

Return method	Beep	ERROR lamp State	LCD	
			Upper line	Lower line
When the error is detected,	ON	ON	E60 LAN	Receiving error
Push down KEY switch	OFF	ON	E60 LAN	Receiving error
Push PAUSE switch	OFF	OFF	PAUSE	
Turn your printer back on	OFF	OFF	READY	-------

7 Specifications

7.1 General specifications

Rating		
Power voltage		100 to 260VAC
Rated frequency		50Hz /60Hz
Power consumption		About 390VA
Print media		Recommended media by Autonics
Environment conditions	Operating	Ambient temperature of 5 to 40˚C Maximum relative humidity of 85RH (None condensing RH)
	Storage:	Ambient temperature of 0 to 70˚C Maximum relative humidity of 90RH (None condensing RH)
Outer dimensions	4012PIM	220(W) X 311(H) X 260(D) mm
	4012PIH	220(W) X 311(H) X 405(D) mm
Weight	4012PIM	About 11 kg
	4012PIH	About 15 kg

7.2 Features

Item		Basic features	Remarks
Printing Specifications			
Printing methods		Thermal transfer , Direct Thermal	
Print density		360 DPI (11.8 dots / mm)	
Maximum print width		108.4 mm ± 0.2 mm	The number of total dots 1280 dots
Valid print width		108.4 mm ± 0.2 mm	1280 dots
Print speeds (mm/s)	4012PIM	150,120,100,80,60,40,30,20,15	
	4012PIH	200,150,120,100,80,60,40,30,20,15	
Printable area		Drawing memory, use in tripartition 108.4mm (W) x Feed 700mm	
Operation mode			
Media handling		STD, Strip, Tear off, Peel off, Cut off, and Applicator	
Print media		Die cut (Label paper), Continuous forms	
Length measurement function		Manual , automatic, Fixed length	
HP sensor level learning function		Automatic level adjustment from panel switch	
Error detection function		Paper-out, No ribbon , Cutter error, Communication error, analysis error	
Warning function		Printhead overheating	
Operator panel			
LCD		8 columns wide 2 lines	
LED		2 LEDs : Ready , Error with functions in remarks	* Blinking during writing to internal ROMs * Comes on at the label gap sensing
Switches		4 Switches: PAUSE /◄, FEED/►, DENSITY/POSITION,/MENU, CALIBRATE LEVEL / ENTER	
DRTA INTERFACE			
Receiving buffer			
Printer control code			
Standard Interface Centronics (Compliance)		8-bit data parallel, Control signals(Strobe, ACK, Busy, Paper-out, Select, Error)	

7.3 Fonts and Barcodes

Item		Basic features	Remarks
Print fonts			
Metrics sizes (Alphanumeric, kana)		8 x 8, 12 x 12, 16 x 16, 16 x 24 24 x 24, 24 x 36, 32 x 48, 48 x 60	Autonics standard ANK
Kanji (standard)		16 x 16, 24 x 24, 32 x 32 (Gothic Japanese font)	JIS level-1 kanji set JIS level-2 kanji set
Kanji (Option)		24 x 24, 32 x 32 (Mincho Japanese font)	ditto
Outline font			
	M font	Code page 850,473 Latin No.1 (ISO8859-1)	Swiss 721 Bold
OCR character (Numeric character only)		16 x 18, 24 x 27, 32 x 36, 40 x 45	
External characters		80 characters with 24 x 24	
Available bar-code type		Code39, NW7, Industrial , Matrix, Interleaved 2 of 5, JAN13/8, UPC A/E, CODE93, CODE128, Customer barcode	
Two-dimensional code		PDF417,QR code,VeriCode,DataMatrix, MaxiCode	
Edit function			
Character enlargement		X1 to X10, X16	
Format rotation		0,180 deg. CW	
Character string rotation		0,90,180,270 deg. CW	
Character, bar code rotation		0,90,180,270 deg. CW	
Pitch between		Specified by mm or dots	
Format registration		2 types	
Character inversion		Character by character	
Drawing graphic		Straight line, rectangle, Circle, Oval, and fill pattern	
Bit image		Beta file, Monochrome BAP, PIX	Enlargement and rotation are also available

7.4 Character code table

Fig 7a Autonics standard ANK

下位4ビット \ 上位4ビット	0	1	2	3	4	5	6	7	8	9	A	B	C	D	E	F
0				0	@	P		p		ｰ		ｰ	ﾀ	ﾐ	=	╳
1			!	1	A	Q	a	q		ｱ	｡	ｱ	ﾁ	ﾑ	ｷ	円
2			"	2	B	R	b	r		ｲ	｢	ｲ	ﾂ	ﾒ	ｸ	年
3			#	3	C	S	c	s		ｳ	｣	ｳ	ﾃ	ﾓ	ｹ	月
4			$	4	D	T	d	t		ｴ	､	ｴ	ﾄ	ﾔ	◢	日
5			%	5	E	U	e	u		ｵ	･	ｵ	ﾅ	ﾕ	◣	時
6			&	6	F	V	f	v		ｶ	ｦ	ｶ	ﾆ	ﾖ	◥	分
7			'	7	G	W	g	w		ｷ	ｧ	ｷ	ﾇ	ﾗ	◤	秒
8			(	8	H	X	h	x		ｸ	ｨ	ｸ	ﾈ	ﾘ	♠	
9			)	9	I	Y	i	y		ｹ	ｩ	ｹ	ﾉ	ﾙ	♥	
A			*	:	J	Z	j	z		ｺ	ｪ	ｺ	ﾊ	ﾚ	♦	
B			+	;	K	[	k	{		ｻ	ｫ	ｻ	ﾋ	ﾛ	♣	
C			,	<	L	¥	l	:		ｼ	ｬ	ｼ	ﾌ	ﾜ	●	
D			-	=	M	]	m	}		ｽ	ｭ	ｽ	ﾍ	ﾝ	○	
E			.	>	N	^	n	~		ｾ	ｮ	ｾ	ﾎ	゛	／	
F			/	?	O	_	o			ｿ	ｯ	ｿ	ﾏ	゜	＼	

7.5 Print media

7.5.1 Types of print media

(1) Paper forms

a) A roll of label paper

b) A continuous roll of paper

(2) Paper Type

Please contact our sales department about selectable paper type, when you select paper media, because there are various types of paper. Before you choose a paper type, be sure to check print quality in advance.
If you choose our standard papers, you can use them in an easier and more carefree manner.
Print quality depends on paper type. Generally, use a paper with high surface smoothness..

(3) Paper thickness

0.065 to 0.27 mm (A board thickness is included in label.)
In the case of a thick paper, choose one as soft as possible.

7.5.2 Print media dimension

(1) Paper width(A backing paper thickness of label paper is included.) and Minimum length

Width	40 mm to 116 mm	
A minimum length	STD	5 mm
	Peel-off	25 mm
	Tear-off	35 mm
	Cutter	35 mm

Note 1) Contact us if you use a label with a shorter length specified as above.

(2) A minimum space and cut groove (for a reflection sensor, corresponds to a reflection mark) for label detection

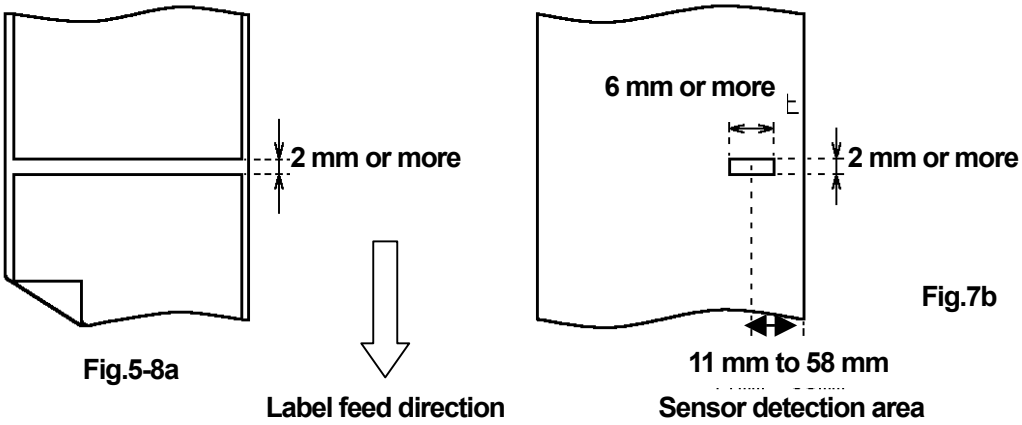

Fig.5-8a

Fig.7b

Note 2) In the auto cutter mode, take up 4 mm or more space.
In the feed mode, take up 3 mm or more (Minimum 2 mm)space typically

(3) Sizes of a roll of label paper

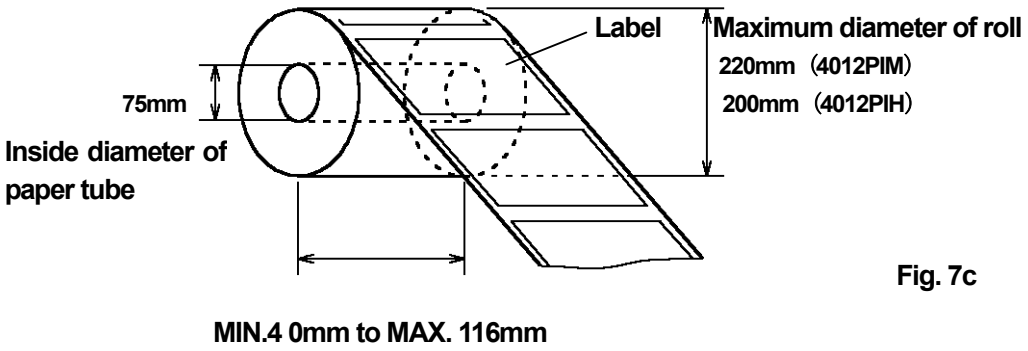

Fig. 7c

(4) Dimensions and printing area for label

A : label to label in length

B : Actual label length

C : Effective printable area

See " Printable area "
in " 7.2 Features ".

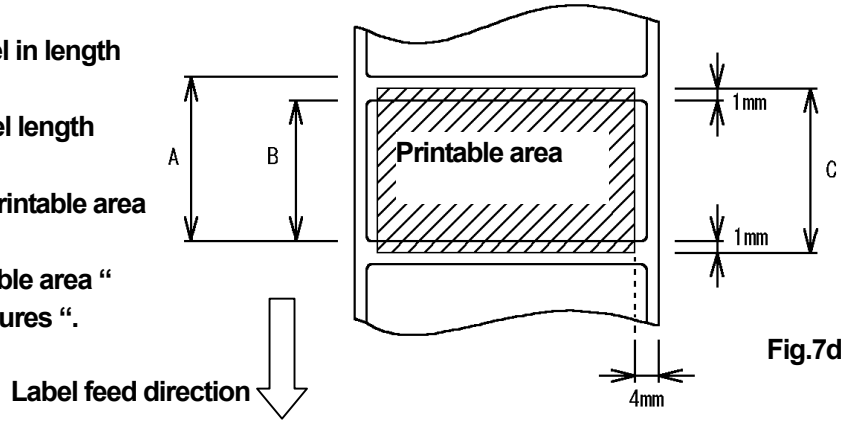

Fig.7d

Note 1) Actual label dimension B for label , See " (1) Paper width(A backing paper thickness of label paper is included.) and Minimum length in **7.5.2. Print media dimension**, and " Printable area " in **7.2 Features "**
"

Note 2) When you specify the print area, add about 1mm to actual label length, thinking about errors brought by sensor and die-cutting.

7.5.3 How to store

Labels should be stored in a dust-tight seal plastic bag to prevent the entry of dirt, and use them as soon as possible while preventing degradation to them from hot and humid surroundings.(Long-term storage may degrade quality.)

8 Maintenance

8.1 Cleaning and a routine check

Preparation (1) Ethyl alcohol / Neutral detergent

(2) Gauze (Soft cloth) / Cotton swabs

Using the other solvents（ such as thinner, toluene .）might cause deformation or discoloring

8-1-1 Cleaning and a routine check of the printhead

The printhead should be cleaned once a day or with each use of a roll of label paper.

Cleaning steps (1) Open the cover for the print mechanism

(2) Dip cotton swabs or gauze into ethyl alcohol.

(3) Clean the part (heating element) shown in Fig.8-1a.

Inspection of printhead Examine any damage on each part such as the heating element during clean-up. Before using your printer, or after clean up the printhead, check normal print quality with test printing from “3.6 Print check (Test printing). Some scratches on the printhead may result in unprintable spots.

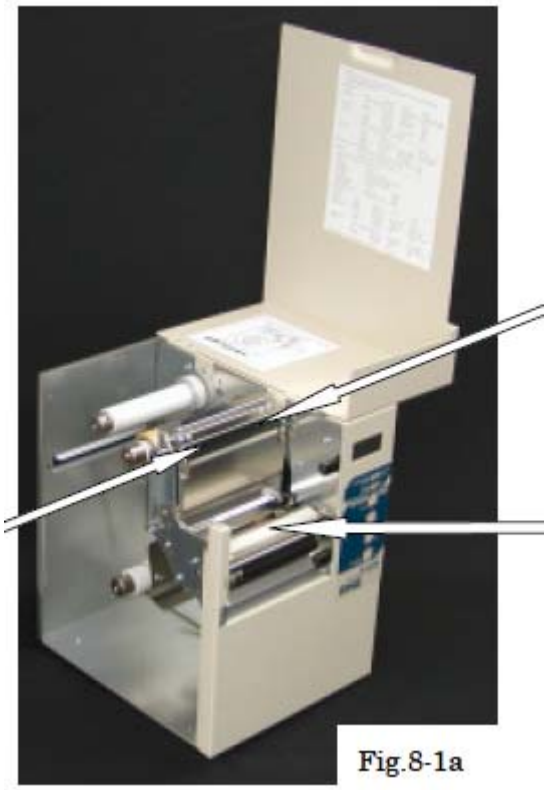

Fig.8-1a

Do the job after powering off the power supply of your printer.

Cleaning parts

Cleaning up the printhead
Open the cover, and clean the heating element of the printhead

Printhead

Platen roller clean-up
Remove any dust or glue from the platen roller by rolling the rubber part on the roller by hand. then wipe dirt such as fine paper powder from the roller using a soft cloth moistened with ethyl alcohol.

8.1.2 Cleaning and a routine check of platen roller

The platen roller should be recommended to clean once a day or with each replacement of a roll of label paper .

Cleaning steps (1) Open the cover for the print mechanism

(2) Dip cotton swabs or gauze into ethyl alcohol.

(3) Clean the platen roller by rolling it by hand , shown in Fig.8-1a.

Check for Platen roller Check for any damage and dirt on the surface of the platen roller during clean-up. Replace the platen roller with new one, if any damage is found on it.

8.1.3 Cleaning the inside and outside of your printer

Wipe the inside and outside of your printer with a soft cloth dampened with ethyl alcohol or mild pH-neutral cleaner. Always keep clean the part concerning a moving label and ribbon.

8.2 Handling or replacing printhead

(1) As a printhead is its own life. If it breaks, you should replace it with new one.
(A replacement service for printhead is offered for pay.)

There are knacks in prolonging the useful life of printhead .and in using it without damage.

1. Do not force to turn the prinhead by hand with print media and a ribbon not installed.
2. Clean the printhead every day, or with each replacement of a roll of label paper periodically, or at the time of the trouble occurrences concerning ribbon moving.
3. Do not use ribbons and print media not specified by Autonics.
4. Keep the adhesion of firm materials such as powder from grinder, sand paper, or grains of sand paper from entering the printing unit.
5. Don't touch the printhead with firm materials such as metal.
6. If Oils or fats are on the printing surface of printhead, wipe them with a soft cloth dampened with ethyl alcohol before using your printer.
   (Water and salt do harm to the surface of print part.)

(2) Our service engineer will change a printhead, if necessary, plaese contact your nearest Autonics authorized dealer.

8.3 Mechanically consumable service components available with additional cost

Printhead
Platen roller
Friction plate
Timing belt

These components are on a chargeable basis. (regardless of what warranty period says.)

Ver. 170422